THERMASOL®

Astra Indoor Sauna
Installation Instructions

14-ASTRAD

Rev. April 2026

Table of Contents

Preparing for Installation	**02**
Cabin Installation	**05**
Wall Element Assembly	**05**
Benches and Backrest Assembly	**09**
Ceiling Installation	**14**
Installing Glass Walls and Doors	**16**
Installing Heater and Accessories	**20**

Preparing for Installation

Read these assembly instructions carefully and keep them within reach when using the sauna so you can look up product information at any time.

Before you begin work, check the parts list to ensure that all the individual parts have been delivered. If you discover any missing parts, notify your dealer within 7 days of receiving the sauna cabin.

- **The room the sauna will be installed in must be dry and have an appropriate amount of air circulation.**
- **The floor must be level and even, preferably a stone or tiled floor.**
  - A minimum room height of 8' is required for the cabin installation work.
  - Maintain a minimum clearance of 2" from the wall(s) to ensure proper ventilation and optimal sauna heater performance. This gap will be concealed upon completion of the installation, covered by the exterior glass and/or wood finish.
- **Interior wood must not be handled with any impregnating material, the interior surfaces of the wood should be left raw and untreated.**
  - Wood is a natural product that can swell, shrink or warp, despite being premium material wood species. For this reason, some force may be necessary during the installation.
  - Air circulation in the sauna cabin is crucial for optimal performance and safety. Please observe the dimensions for the air intake and outlet vents specified by the manufacturer of the sauna heater.
  - All screw fittings are pre-drilled.
- **Installation requires 2–4 people.**

Dry Environment

Solid Surface, Leveled Floor

No Impregnation Liquids

Maintain Ventilation Standards

Attention!

The electrical connection may only be performed by a licensed electrician.

Tools Needed

Tape Measure

Utility Knife

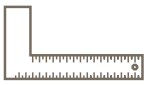

Right Angle

Wooden Wall Lifters

5'-6' Bubble Level

Rubber Mallet

Cordless Drill
(Cross-Head and Torx Bits)

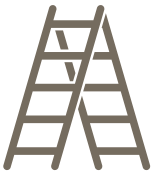

Ladder

2–4 Installers Needed

Symbols Used

Tips and Useful Information

Pre-Drilled

Handle with Care

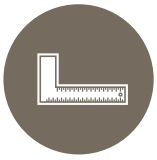

Check Right Angle

Maintenance and Cleaning

The sauna should be cleaned with a damp cloth. Only use warm water—no cleaning products. We recommend heating the cabin once a month if the sauna has not been used for a an extended period of time.

Sap pockets are not grounds for return, since they can always appear in spruce wood and the depth at which they lie cannot be detected during the fabrication process. If sap pockets are located under the surface, heat can cause them to soften and “bleed”.

The leaking sap can be removed with a rag soaked in acetone. If only droplets of sap occur, allow these to harden and then carefully scrape them off with a knife.

Glass Care

Handle with care: Special care must be adhered to with the edges of the tempered glass which can shatter into small pieces in the event of accidental impact. Insert protective cushioning (e.g: cardboard box) under the edge of the glass during the installation process to ensure proper protection.

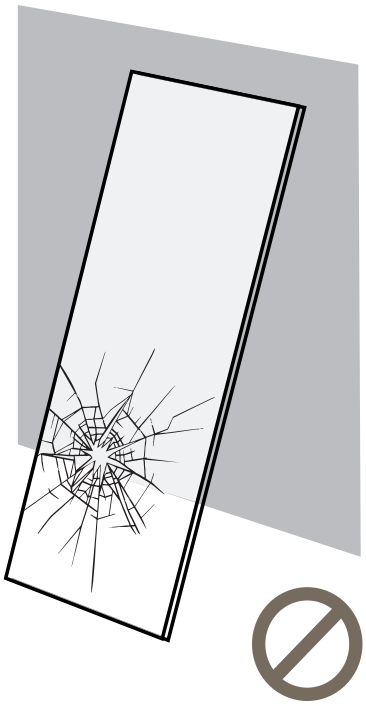

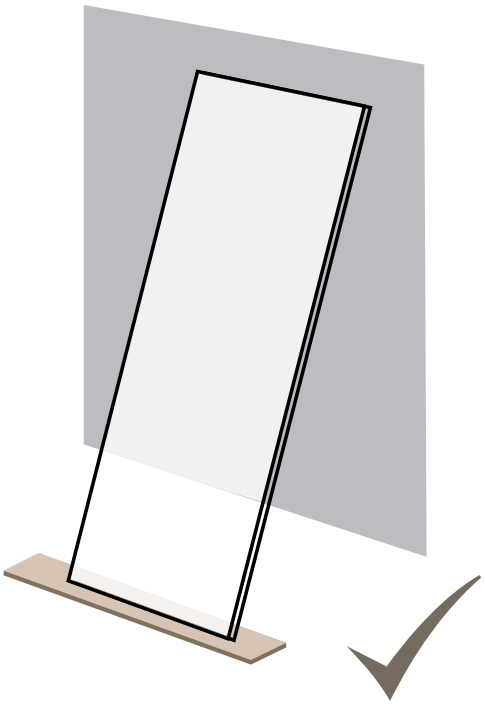

Disposal

The packaging used contains both recyclable materials and potential hazardous substances. Do not dispose within the household. Instead, ensure it is handled and disposed of in compliance with local environmental and safety regulations.

Cabin Installation

Sauna Installation Is Divided Into Six Phases

1. Wall Element Assembly
2. Benches and Backrest Assembly
3. Ceiling Installation
4. Installing Glass Walls and Doors
5. Installing Heater and Accessories

Cabin may be configured in right- or left-hand orientation. Refer to the corresponding floor plans.

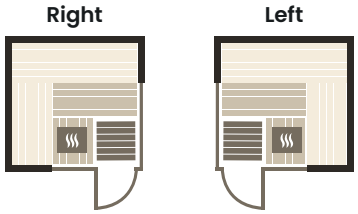

1. Wall Element Assembly

Sauna Parts

Two sides of the sauna are made of wooden walls. For easier transport, they are divided into four parts (A, B, C, D, E, F), as shown in the schematic on the next page. First, assemble the lower two parts (A, B), then add the upper two (C, D). All joints are pre-prepared and easy to install.

The panels (A, B) are supported by commercial grade footing.

The dowels on the top side of the panel are prepared to slot into the notches and ensure a secure joint.

The opening for electronics is located on the lower inner side of the panel.

Walls E and F are added after bench installation.

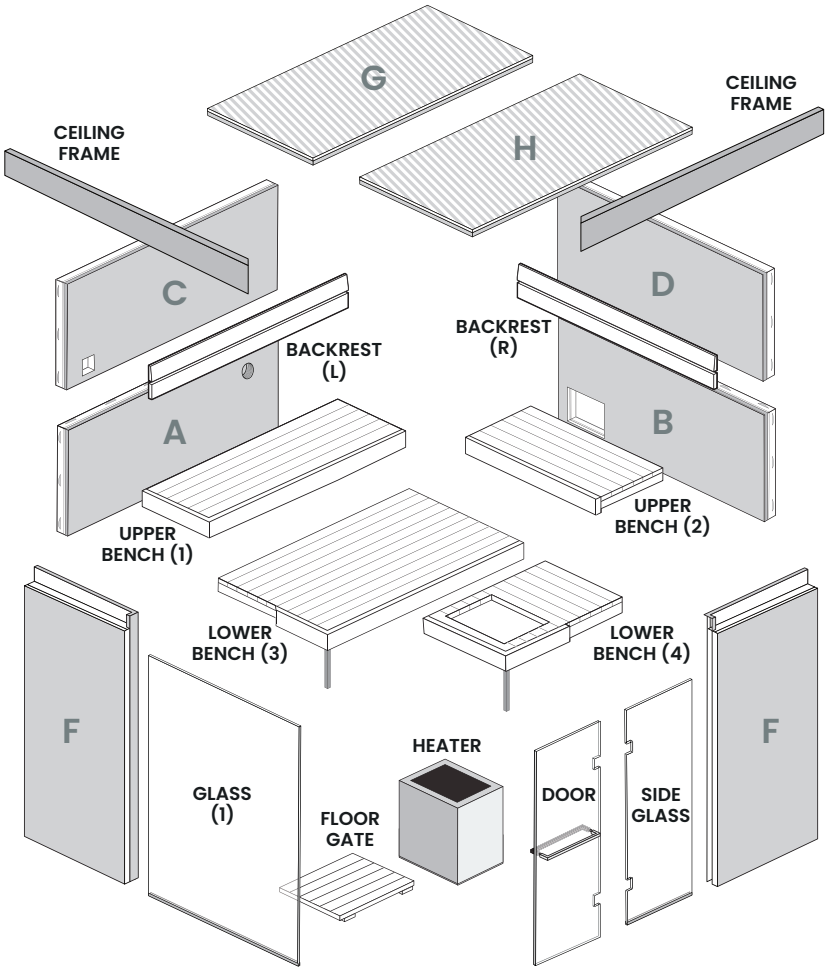

1. Wall Element Assembly

Wall Parts

A vent opening must be connected to a ventilation duct leading outside of the wall cavity.

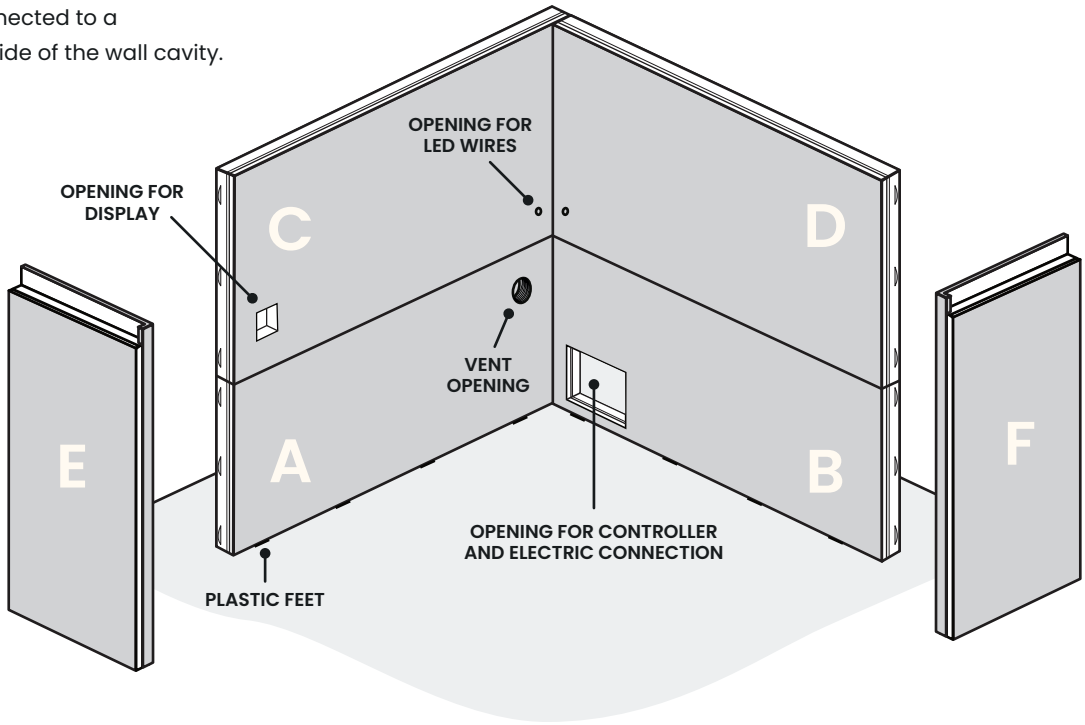

Step 1: Joint Between Panel A and B

Positioning
Place panel A and panel B on a flat surface, aligning them at a right angle (90°).

Alignment
Ensure the pre-prepared cuts on panel A line up with the dowels on panel B.

Connection
Start connecting from the bottom upward.

Gently insert the dowels into the corresponding cuts, ensuring they slide in smoothly and align precisely.

As you move upward, continue pressing or fitting the panels together along the entire joint until the corner is fully closed. The wooden slat and dowel joint securely hold the two panels together, forming a strong, flush corner connection ready for the next assembly step.

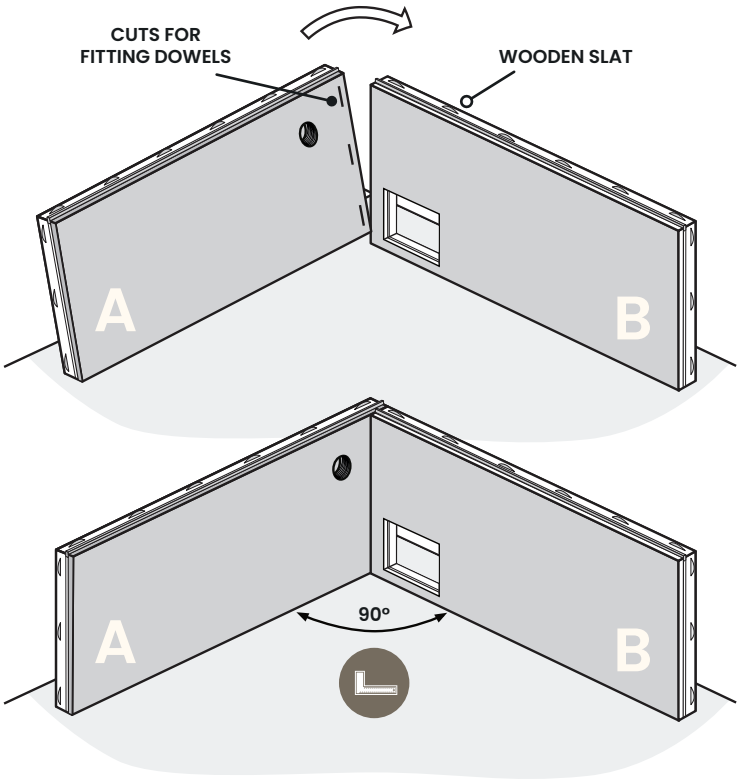

1. Wall Element Assembly

Back Side of the Panel Connection

Leveling
Level the top edge: If the top of the panels is slightly misaligned, use a rubber mallet to gently tap the side of the panel or the wooden block placed underneath. This light tapping helps level the panels at the top and ensures the joint closes perfectly without gaps.

Fastening
Once the panels are level and perfectly aligned, secure them with 4 screws as shown. Use flat-head screws and washers.

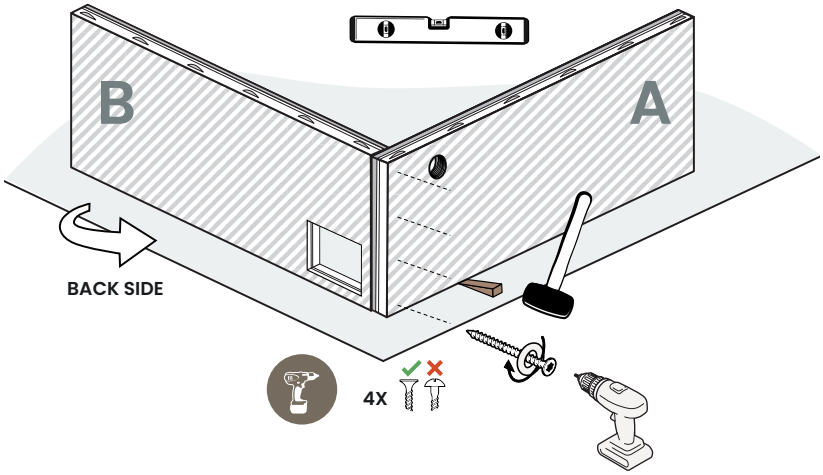

Avoid damage: Do not hit the panel surface directly. Always use a rubber mallet or place a wooden spacer between the hammer and the panel to protect the finish and avoid denting.

Step 2: Adding Panels C and D

Panels C and D are added above panels A and B in the same way. Here too, all joints are pre-prepared, allowing the panels to be assembled easily. To ensure a complete and proper joint, use a hammer if necessary. Once all panels are aligned and properly connected, tighten the bolts (in the corner on the outside).

Panel A and B has wooden slats and dowels that help guide the pieces into position and ensure a precise fit.

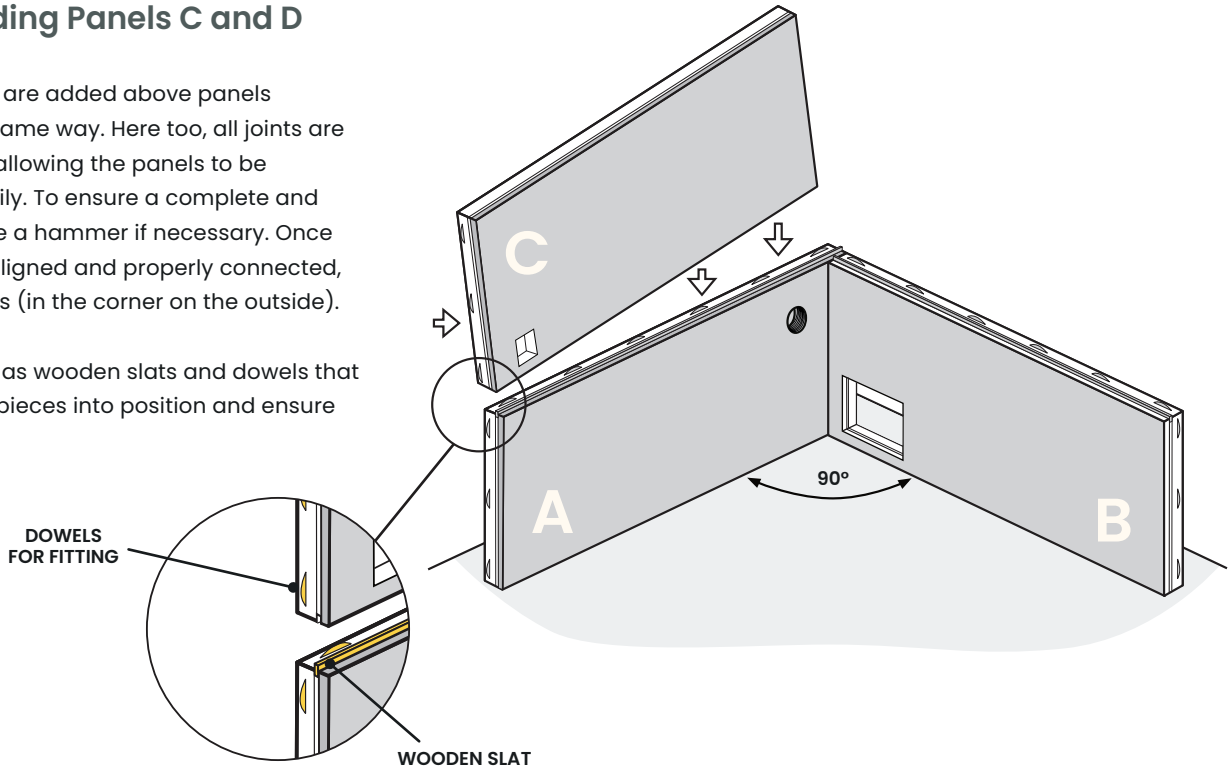

1. Wall Element Assembly

Step 2: Adding Panels C and D

Next, bring panel D into place above panel B. Align the dowels and slat, then slide and lower the panel until both upper panels (C and D) sit flush with the lower structure.

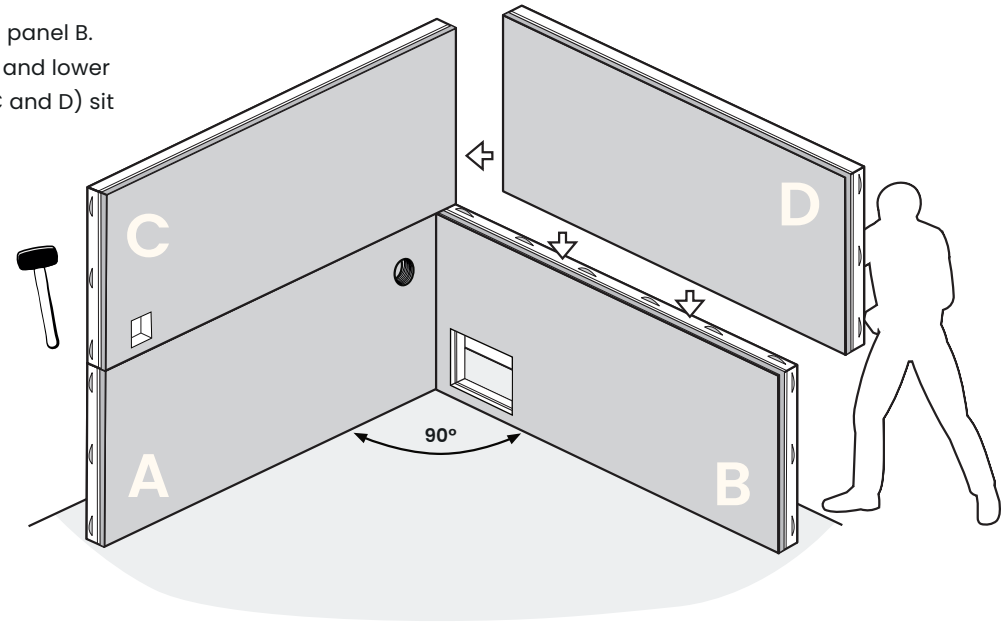

Back Side of the Panel Connection

Move to the back side of the sauna wall construction. Before screwing, check that both upper and lower panels are level and perfectly aligned at the joint—use a spirit level to verify.

Fasten the panels together using the pre-drilled holes and 4 × 5.0×120 mm screws. Insert each screw straight and tighten gradually to ensure strong and even pressure across the connection. Use only the correct flat-head screws as shown.

If the panels shift slightly during fastening, gently tap them back into alignment using a rubber mallet and a wooden block.

Once all screws are tightened, the complete wall corner (A–C and B–D) is structurally secured and ready for the next assembly steps.

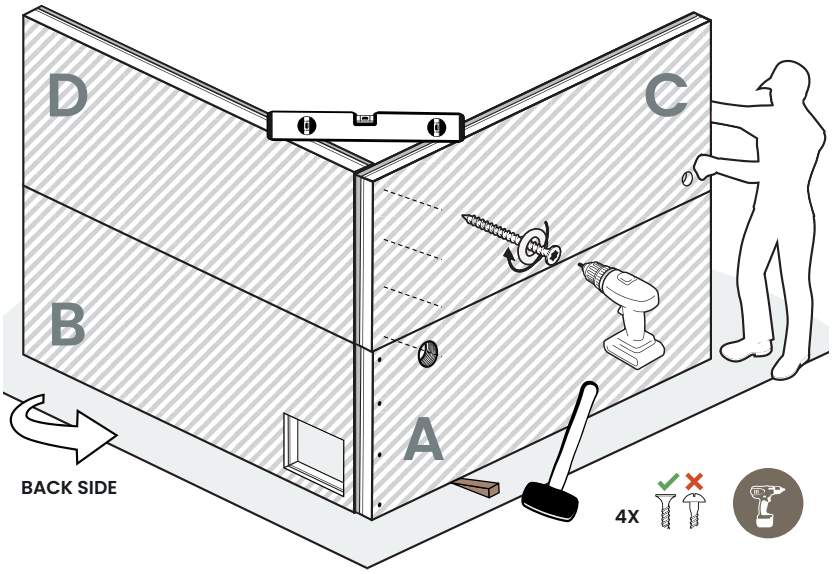

2. Benches and Backrest Assembly

Bench Parts

This illustration shows how all bench and backrest components will be positioned inside the sauna once installed. It serves as a visual guide before you begin the detailed step-by-step assembly on the following page.

This step requires at least two people for safe, accurate installation. One person should hold the bench in position while the second fastens the screws using a screwdriver or drill. This prevents misalignment, reduces strain on the joints, and helps avoid damage.

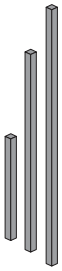

SUPPORT LEGS ASSEMBLY FOR LOWER, UPPER AND BACKRESTS

SEE MEASUREMENTS IF NOT INCLUDED

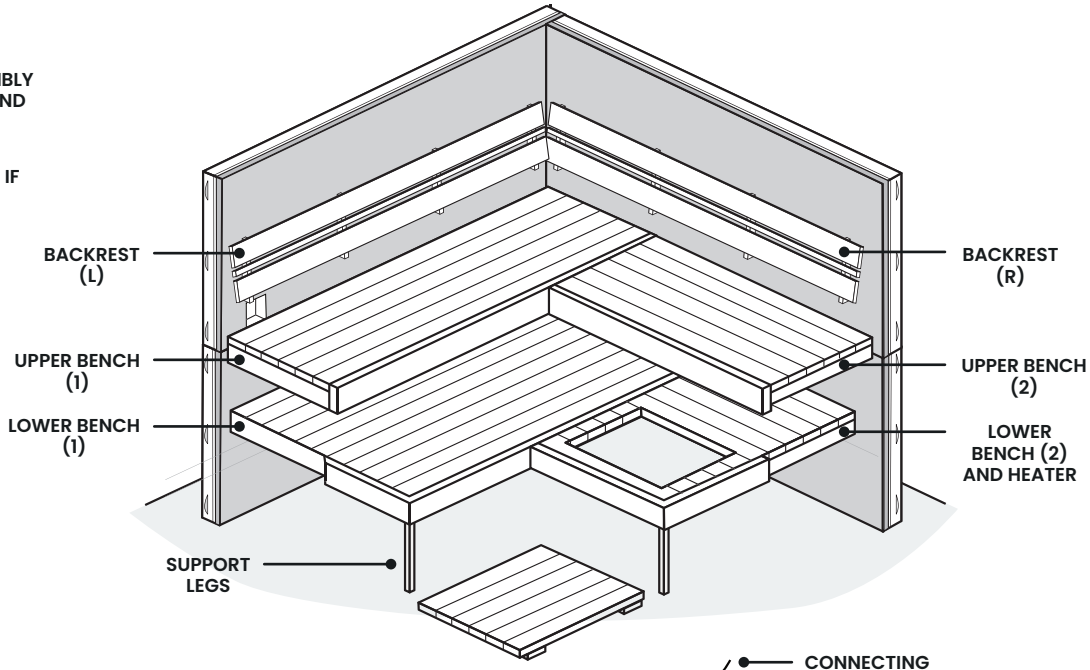

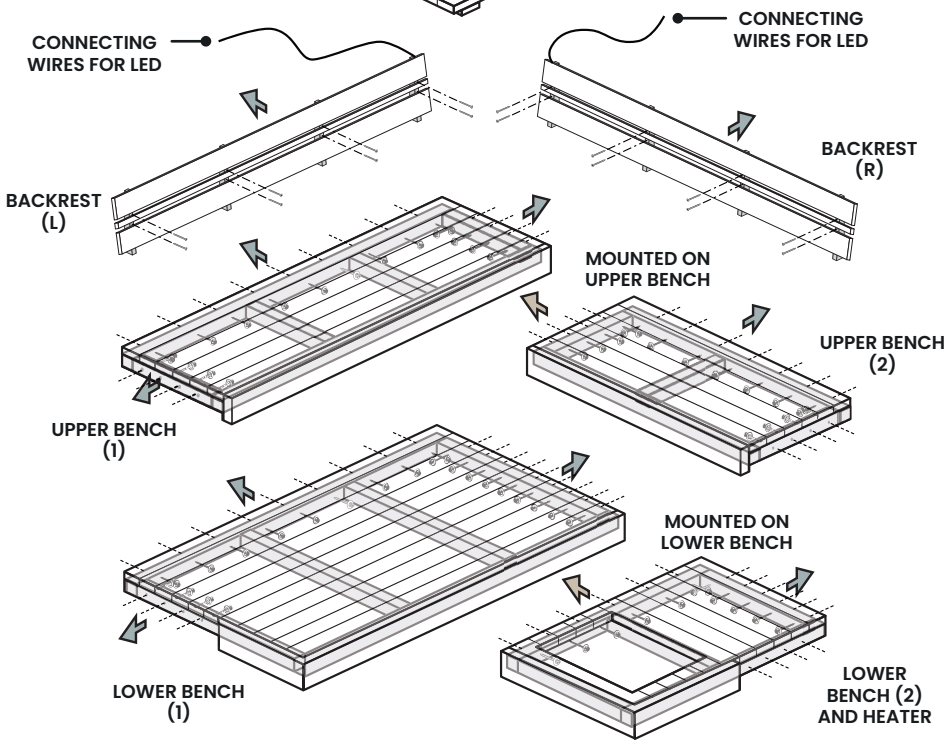

Each bench panel has a reinforced wooden frame that attaches to the sauna walls or benches using the pre-installed mounting screws.

MOUNTED TO WALL

MOUNTED TO BENCH

2. Benches and Backrest Assembly

Step 1: Installing the Backrests and Control Panel

Installing Backrest (L) and (R)
Position the vertical support legs on the left and right walls, at the height shown in the drawing. These legs are only for assembly support and will be removed later.

Route the LED wire through the opening in the wall and into the channel on the back of the backrest. Make sure they are straight and level—their upper edge will define the height of the backrests and benches.

Align the pre-drilled holes in the backrest with the holes in the wall. Fasten the backrest using 8 screws as shown. Do not overtighten, but make sure the backrest is firmly fixed and level.

Installing the Control Panel (Wall B)
The control panel box can now be mounted onto Wall B, in the designated area shown in the illustration. This panel houses the sauna controller and electrical connections, so make sure it is positioned correctly and securely.

Align the control panel with the pre-marked screw positions on Wall B. Hold the panel in place and fasten it using the screws indicated. Ensure the panel sits flush against the wall and that the cable opening aligns properly so the wiring can be routed safely during final electrical installation.

Mounting heights measured from finished floor.

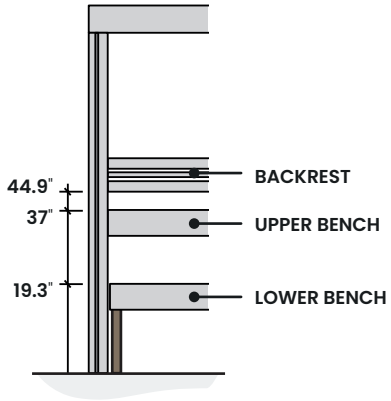

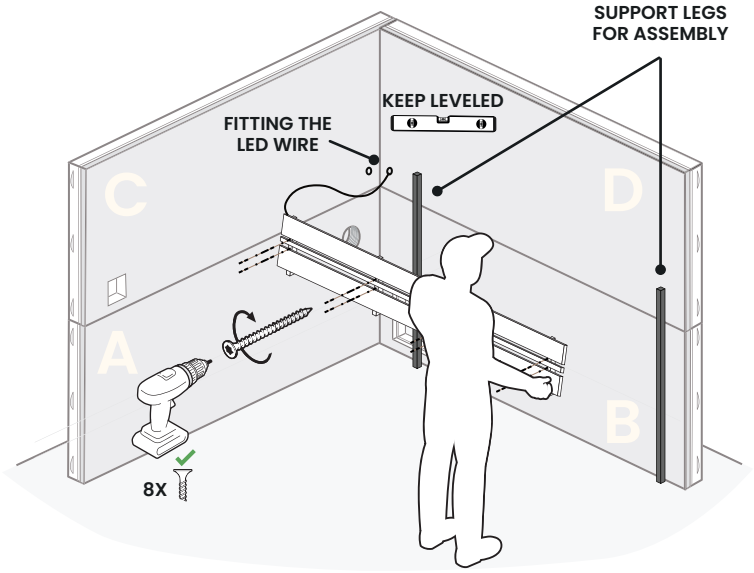

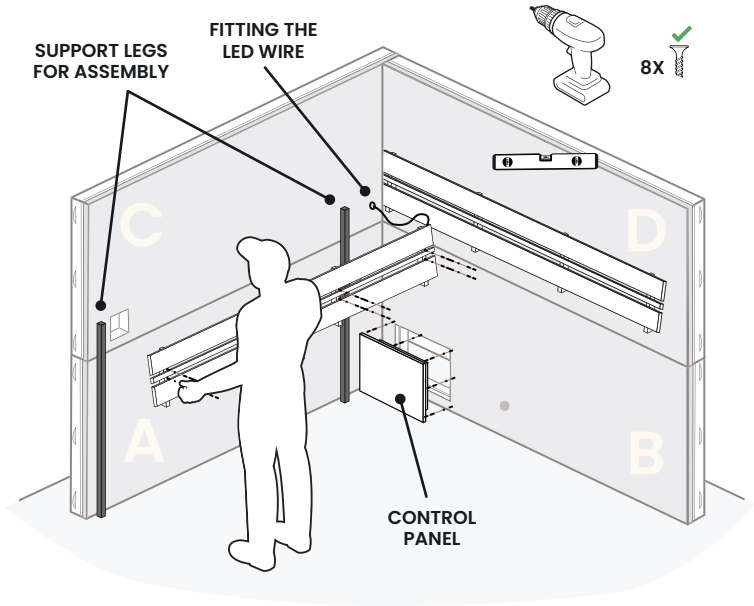

2. Benches and Backrest Assembly

Step 2: Installing Upper Benches

Installing Upper Bench (1) and (2)
Slide the benches into the corner so that their rear edges touch the wall and their frames align with the pre-drilled screw holes.

Place the upper bench frames onto the support legs, so the height is right and letting the legs carry the weight while you position the benches.

Securing Benches and Removing Supporting Legs for Assembly.
Screw the upper bench (1) to the back (A,D) and side walls (B,C,E*) through the pre-drilled holes, as indicated in the drawing.

Upper bench (2) is mounted on bench (1) and the walls (B,D, F*)

Check that both benches are leveled and firmly connected in the corner. Once the backrests and upper benches are fully screwed and secure, remove the temporary support legs—they are no longer needed.

**Benches are screwed later after walls (E) and (F) are mounted.*

This step requires at least two people for safe and accurate installation. One person should hold and support the bench in its correct position. The second person should fasten the screws using a screwdriver or drill. This prevents misalignment, reduces strain on the wooden joints, and avoids accidental damage.

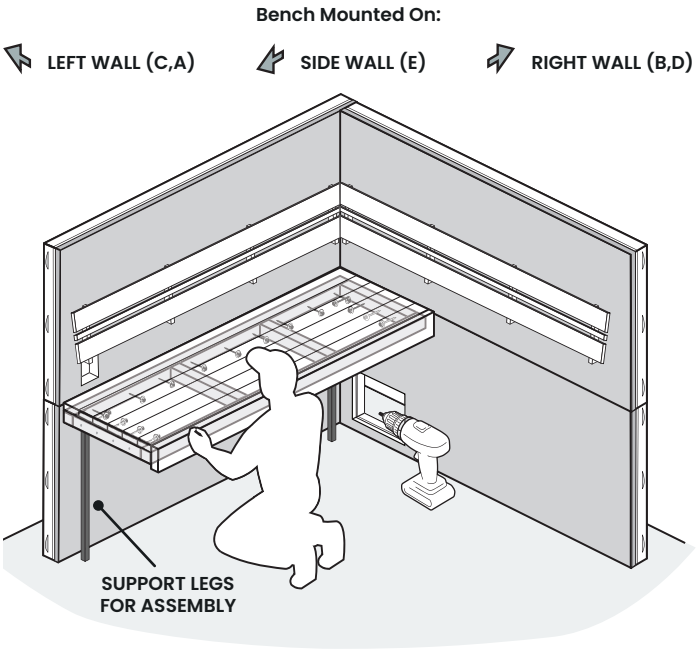

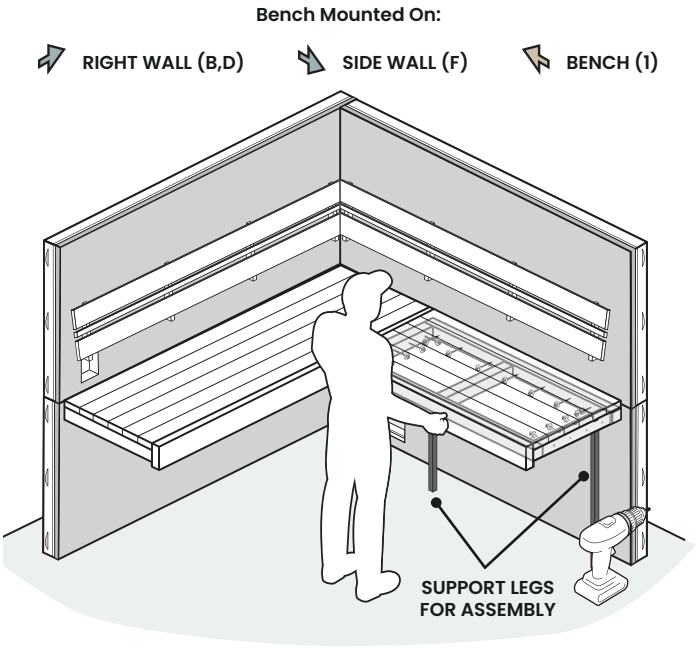

2. Benches and Backrest Assembly

Step 3: Installing Lower Benches

Installing Lower Bench (3) and (4)
Place the lower bench (3) into position, resting it temporarily on the support legs used for assembly—this holds the bench at the correct height while you align it.

Slide the bench into the corner so the frame touches the walls and the pre-drilled screw holes match the mounting locations.

Secure the bench to the walls (A,B,E*) using the pre-installed screws as indicated in the illustration. Once tightened, remove the temporary support peg underneath. Replace it with the final structural supporting leg, which becomes the permanent load-bearing support.

Installing the Lower Bench (4)—Heater Bench
Slide the lower heater bench (4) into place beneath the upper bench, aligning it against the walls and matching the pre-drilled screw holes. Secure the bench to the adjacent wall (B,F*) and bench (3) using pre-installed screws.

**Benches are screwed later after walls (E) and (F) are mounted.*

Bench Mounted On:

LEFT WALL (C,A) **SIDE WALL (E)** **RIGHT WALL (B,D)**

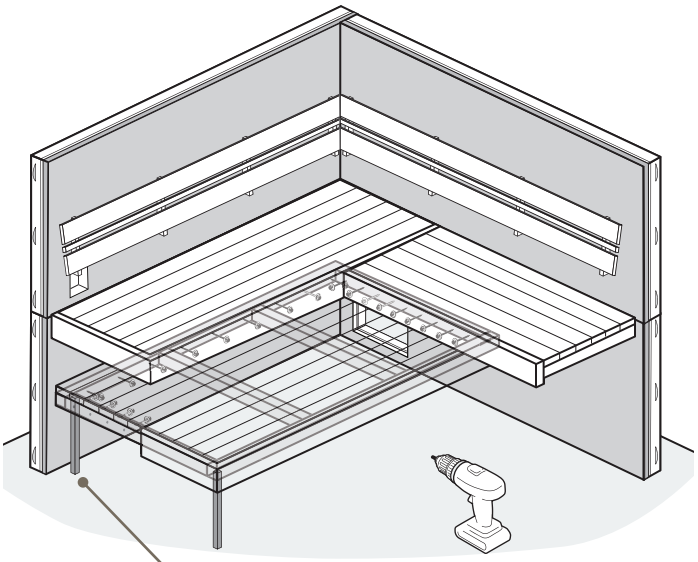

This temporary support will be replaced by the permanent support leg.

Bench Mounted On:

RIGHT WALL (B,D) **SIDE WALL (F)** **BENCH (3)**

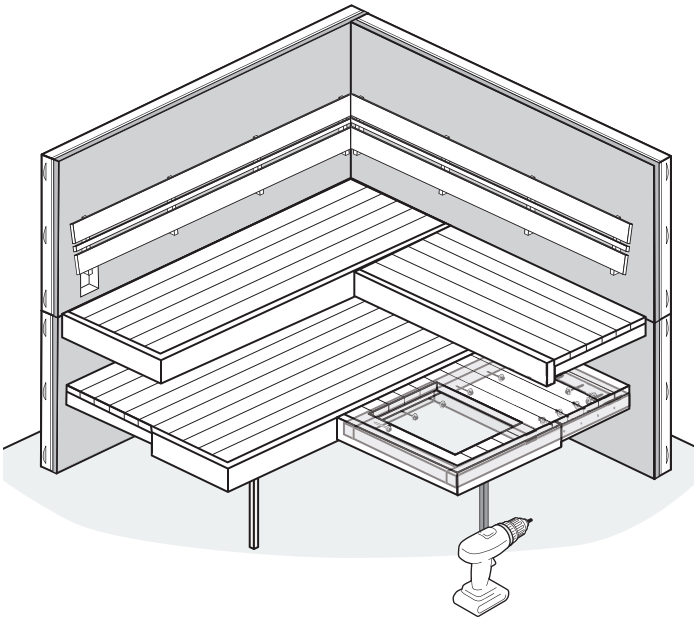

2. Benches and Backrest Assembly

Adding Side Walls E and F

Positioning the Side Walls
Place panel E on the left side of panels A and C, and panel F on the right side of panels B and D. Ensure both panels align vertically and form a clean 90° corners with the front walls.

Pre-Drilled Joints
Each side wall (E and F) comes with pre-drilled holes at a 45° angle for easier fastening. These holes are designed to guide the screws precisely into the adjoining wall panels.

Securing the Panels
Once both side walls are in place and aligned, fasten them using 12 screws in total (6 per side). Use the correct type of flat-head screws, not rounded ones. A power drill or screwdriver can be used for tightening the screws.

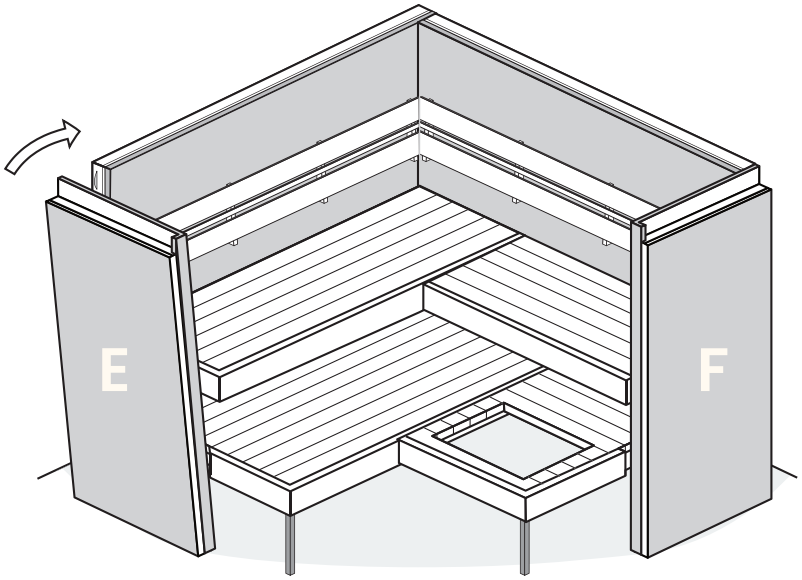

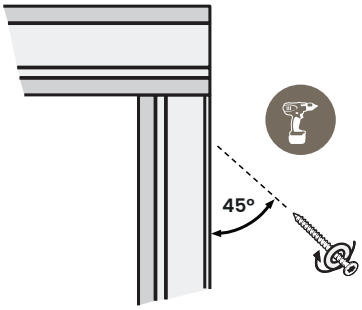

Final Check
Make sure all corners are square (90°) and that the panels sit flush along the joints. If necessary, gently tap the edges with a mallet to ensure tight and even connections before final tightening.

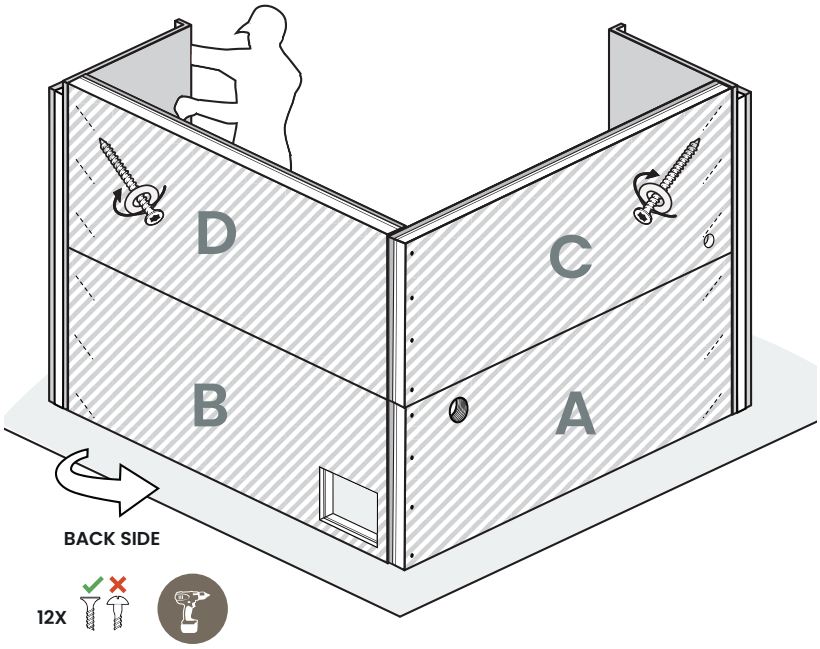

3. Ceiling Installation

Step 1: Frame

Installing the Ceiling Frame
Position the ceiling frame (corner trim) at the top inner edge of the sauna walls. Apply a small amount of wood glue to the corner joint for stability. Fasten the frame to the wall using 4.0 × 40 mm screws through the pre-drilled holes.

Be Careful Not to Penetrate the Outside Face of the Frame.
Ensure the construction is leveled and firmly fixed, as it will support the ceiling panel.

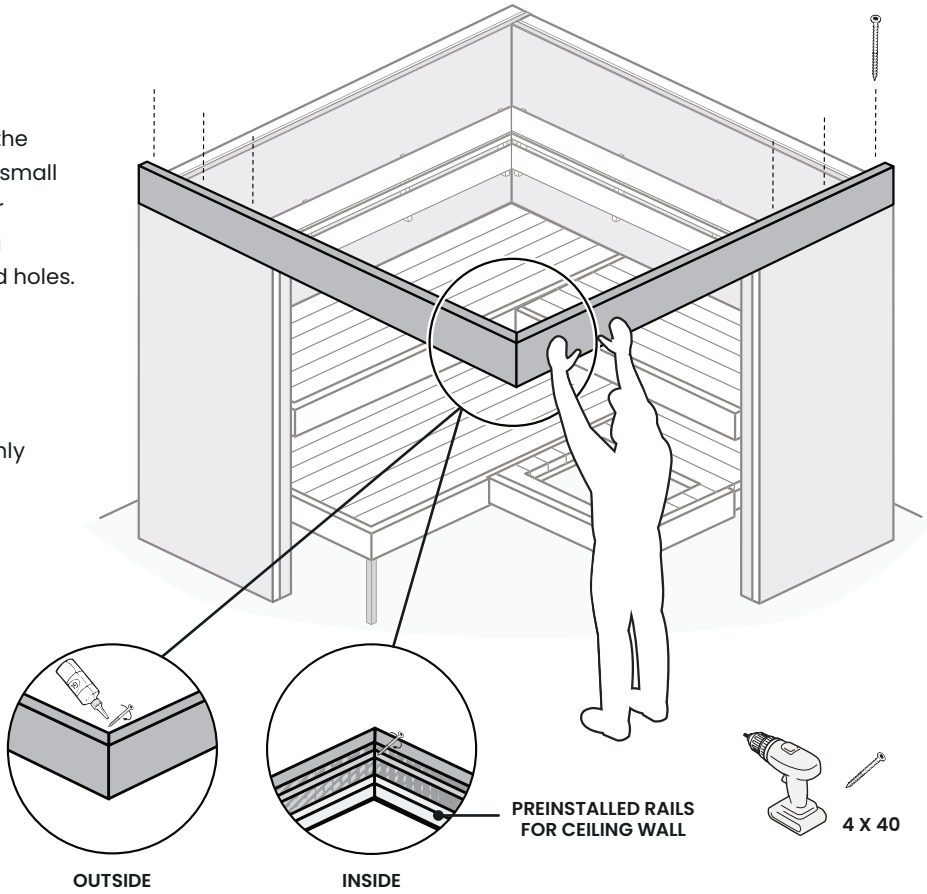

Step 2: Ceiling Panels

The ceiling with the opening for the sensor is above the heater!

Installing the Ceiling Panels
Before placing the ceiling, cover the upper benches with a protective blanket or soft carpet to prevent scratches or impact marks.

Two-person handling required for safety and precision. One person lifts and guides the ceiling panel from the outside. The second person supports and positions it from inside.

Carefully lift the ceiling panel from outside the sauna, tilt it diagonally as shown, and slide it gently into the interior space. Once inside, rotate it horizontally and lower it into its final position inside of the blend frame.

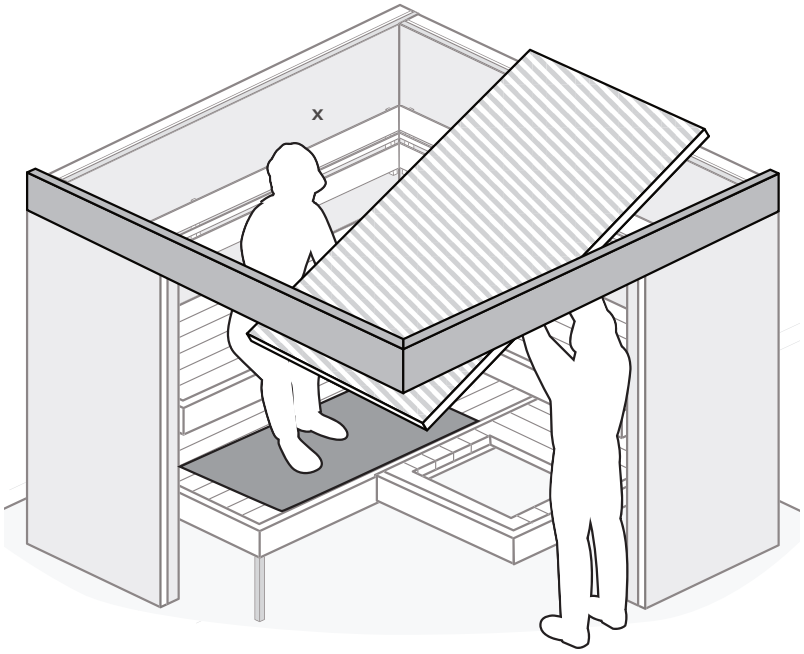

3. Ceiling Installation

Step 2: Ceiling Panels

Installing the Ceiling Blend (Frame Piece)
Carefully raise the ceiling wall panel and rest its lower edge onto the support rails that the frame has pre-installed on the inside.

Tilt the ceiling wall slightly to fit it between the supports. Avoid damaging the top frame or scratching the wall panels.

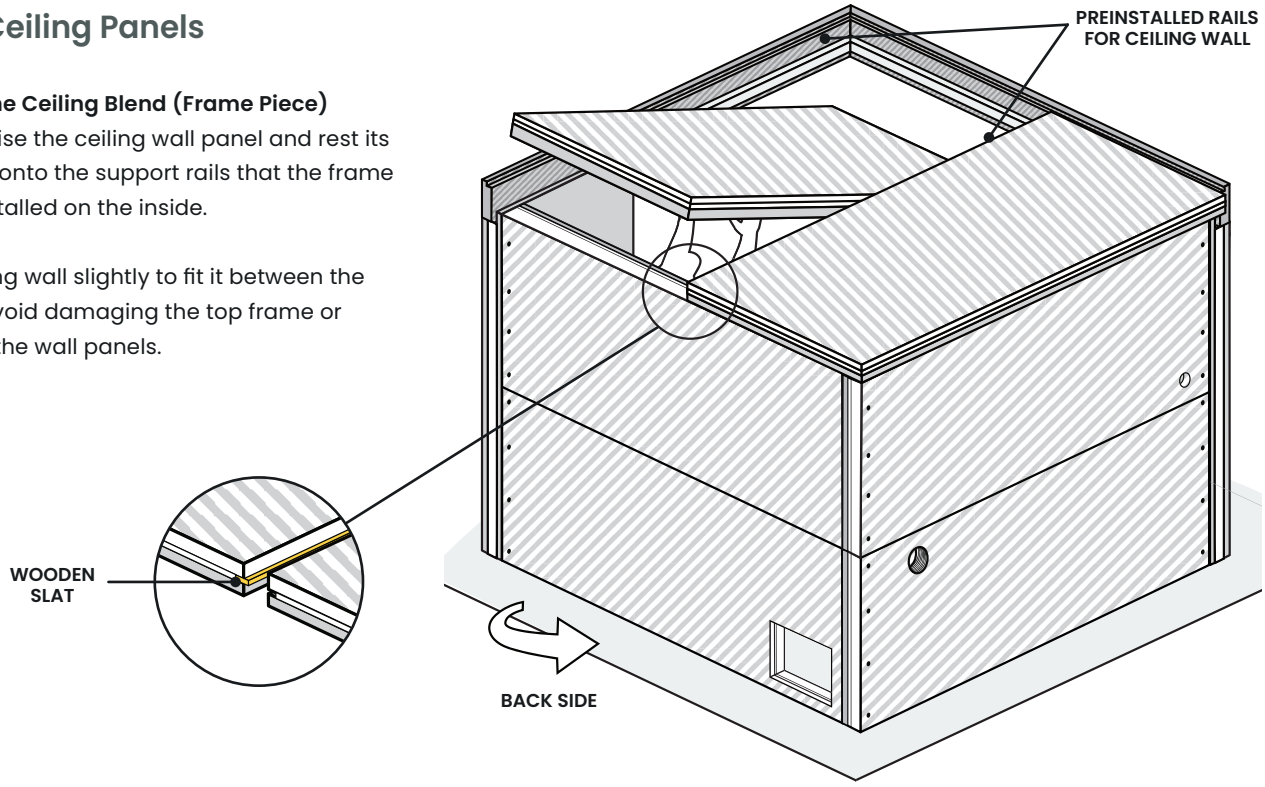

Step 3: Screw In the Ceiling Panels

Once lifted onto the supports, slide both ceiling panels into place. A ladder is required to safely reach and position the ceiling panel.

Make sure the panel with the sensor opening is positioned above the heater (the opening will be visible from below).

Use a temporary support beam as shown to hold the ceiling steady while fastening. With the ceiling supported, secure both panels using the screws indicated in the diagram. Tighten all screws evenly so the panels sit flat and stable on the frame.

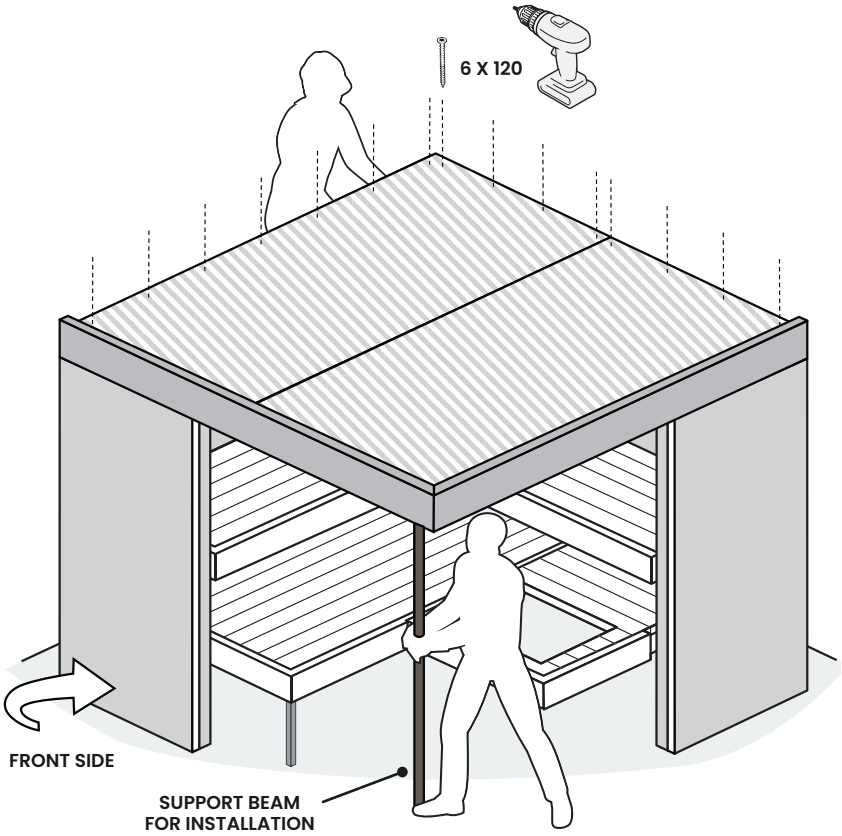

The ceiling panel with the sensor opening must be installed above the heater.

4. Installing Glass Walls and Door

Step 1: Installing Main Glass

When placing the aluminum profiles for glass, make sure it is at a right angle.

Be sure to align the aluminum profile with the wall opening. This profile determines the correct alignment and closing position of the glass.

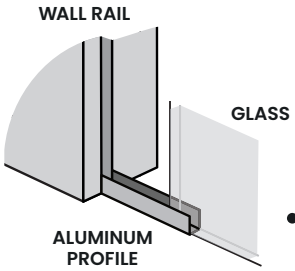

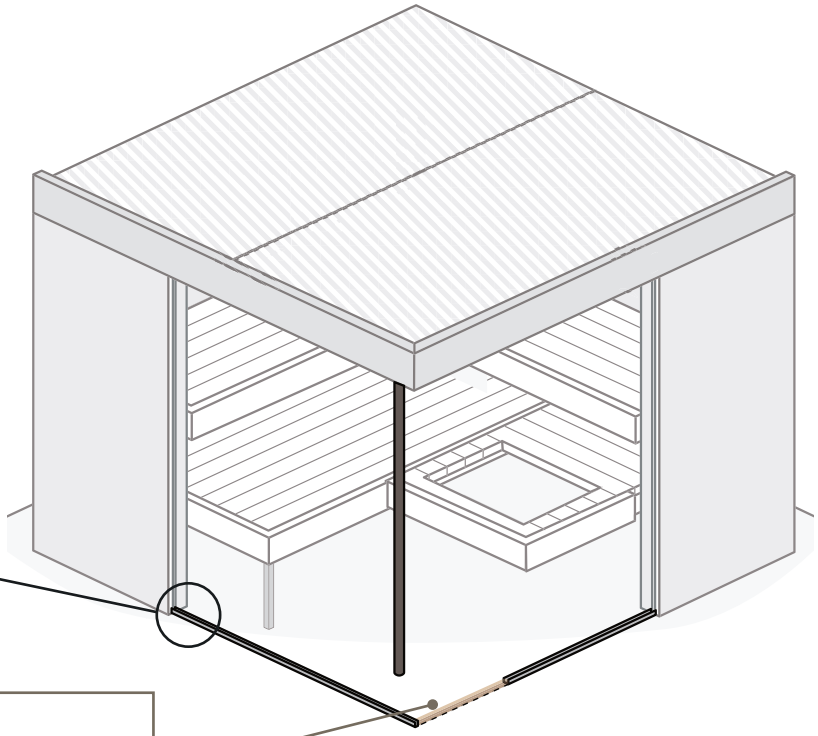

You can use the finishing blends above the door section. These blends provide a clean finish and help align the profiles properly.

Lift the ceiling about one inch. This will create enough space to insert the glass panel safely.

When positioning the glass panel, lift it carefully so the lower edge never touches the floor, even a small impact can cause the glass to shatter.

Keep the panel tilted and controlled while guiding it upward. The glass must first slide into the ceiling blend and then fit into the bottom profile and then slide it to the side wall profile.

Make sure it does not hit the benches, wall edges, or any hard surfaces during this movement. Always handle the glass with two people to prevent twisting or sudden loss of balance and to ensure it settles safely into the blend and side wall channel.

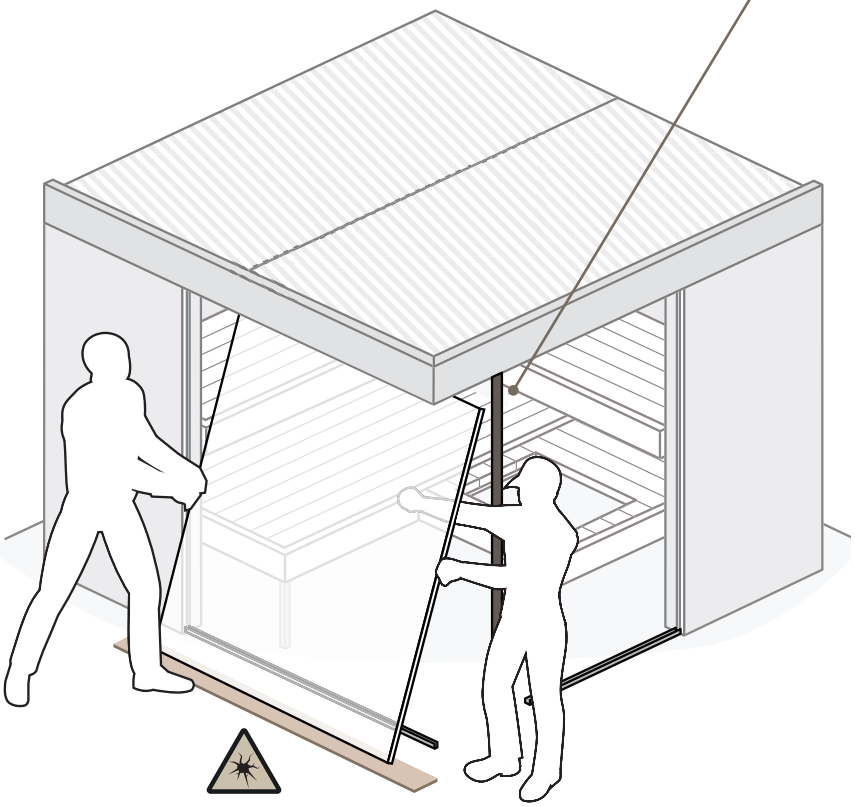

4. Installing Glass Walls and Door

Step 1: Installing Main Glass

When inserting the glass panel, keep the lower edge elevated at all times to prevent contact with the floor, even a small impact can cause the glass to shatter.

Tilt the panel carefully and guide the top edge upward into the ceiling blend. Make sure it moves freely without touching the side wall frame or scraping against the backrest or upper bench.

Use a thin protective spacer at the bottom and at the bench edge to avoid accidental impact. Move slowly and maintain full control of the panel to prevent twisting or bending during installation.

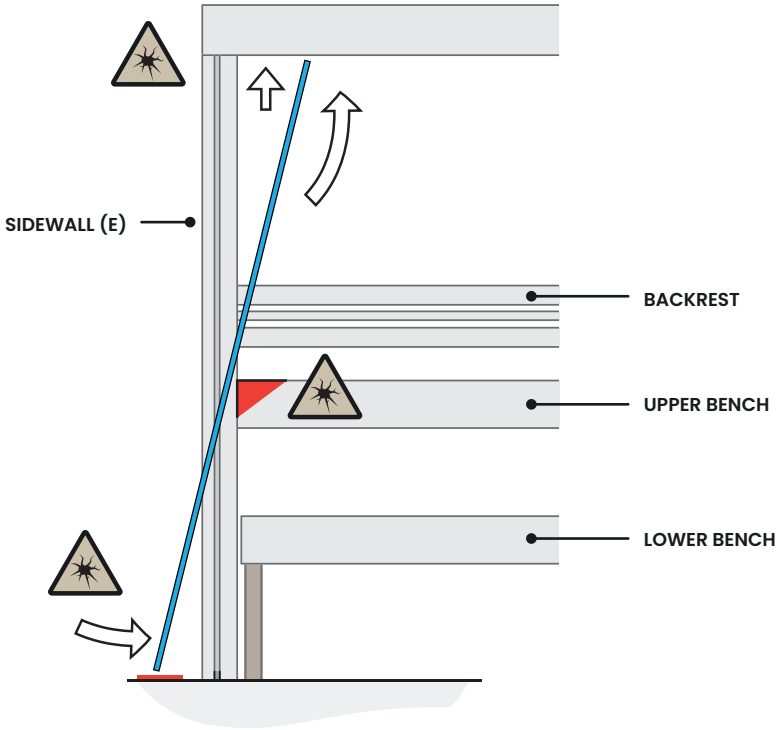

Step 2: Installing Side Glass

When positioning the front glass panel, rest it carefully on a protective wooden board to prevent the lower edge from touching or hitting the floor. Tilt the glass slightly and guide it toward the opening while keeping full control of its weight. Make sure the edge remains elevated at all times, even a small impact can cause the tempered glass to break. Move slowly and align the glass with the side profile before lifting it into the upper blend. Two-person handling is strongly recommended for safe installation.

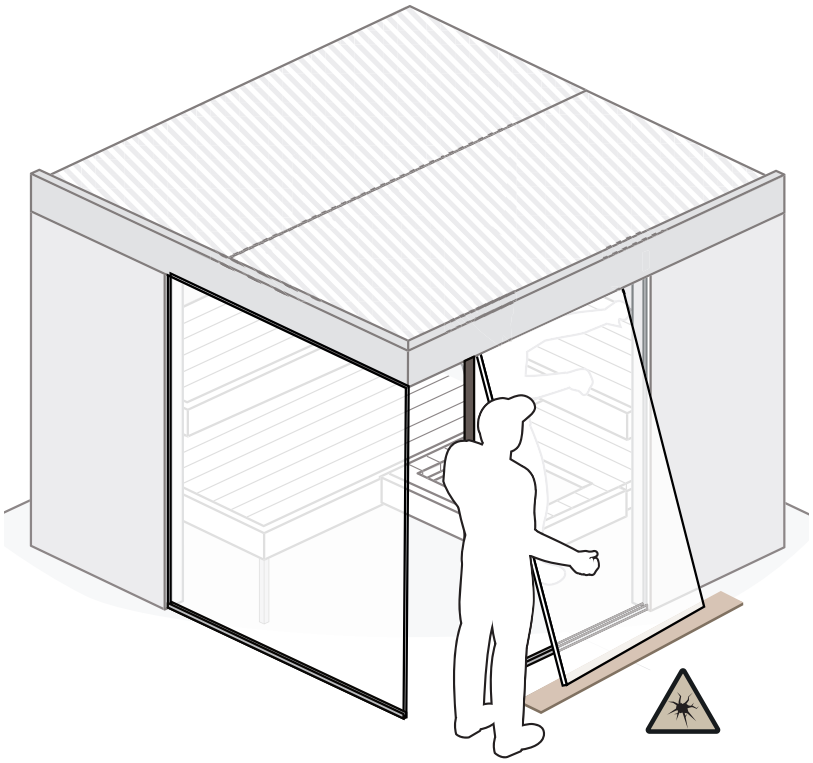

4. Installing Glass Walls and Door

Step 3: Installing Door

Installing the Door Hinges
Begin by attaching the hinge to the fixed window glass before adding the door panel. The hinge has two sides: a window part and a door part, connected by the rotating center section.

The rotating (moving) part of the hinge must be oriented toward the door side, this is the part that allows the door to swing open.

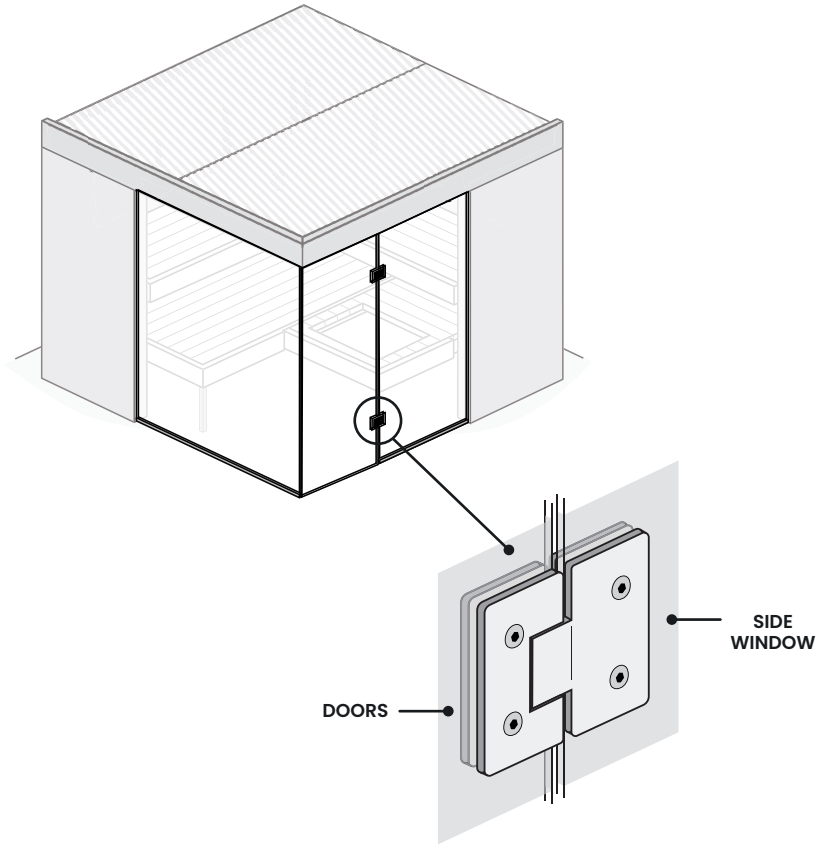

Mount the Hinge on the Window Glass First
Place the rubber pads on both sides of the window glass. These pads are essential:

- They protect the glass from pressure
- They prevent slipping
- They distribute the clamping force evenly

Position the window part of the hinge against the rubber pads on one side, and place the inner clamp plate with rubber on the opposite side of the glass. Tighten the screws gradually until the hinge holds firmly on the window glass. Do not overtighten—the hinge should be secure, but the glass must not bend or show pressure marks.

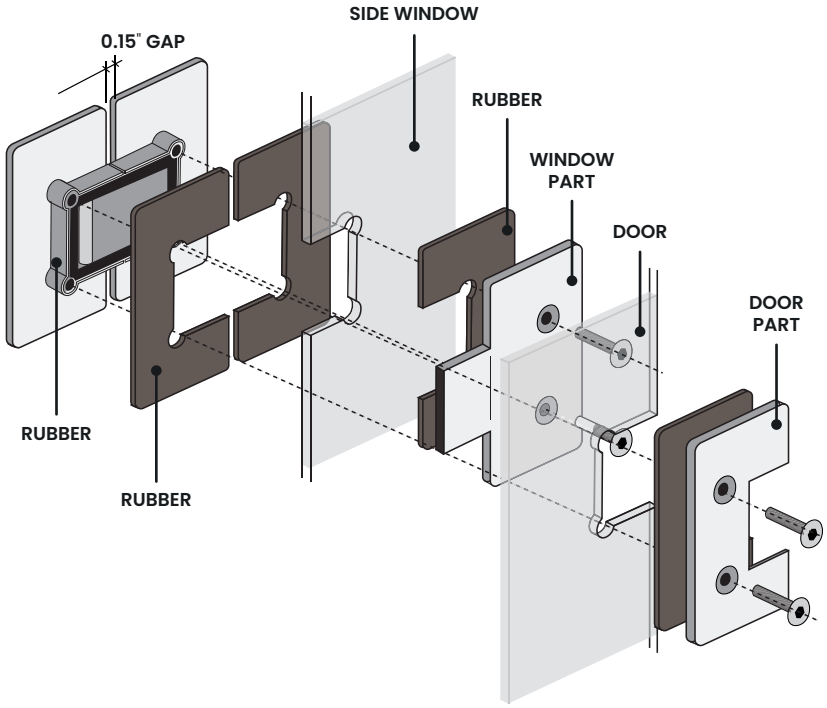

4. Installing Glass Walls and Door

Step 3: Installing Door

To mount the door safely, lift it together with a second person and guide the hinges toward the hinge positions already installed on the fixed window glass. Keep the door slightly tilted and supported from below to avoid putting stress on the glass. One person should hold the door steady in its vertical position while the other aligns the hinge plates and tightens the screws gradually.

Make sure the hinge rotates freely and the door swings without touching the floor or frame. Adjust the position slightly before fully tightening to ensure the door closes smoothly and sits correctly in the opening.

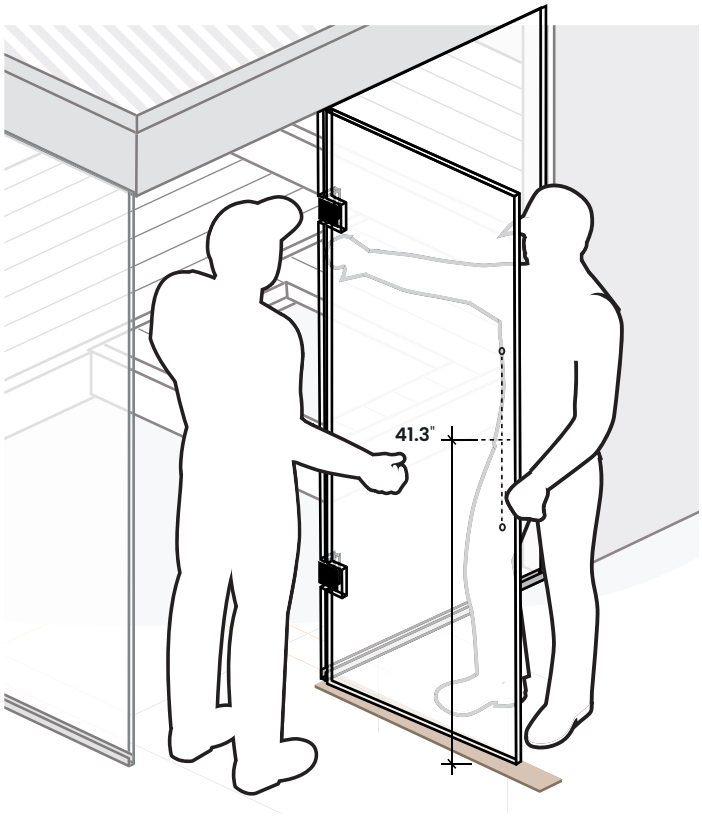

Distance from the floor to the center handle hole is 41.3". This is the correct vertical orientation of the glass door.

At the end of the assembly, attach the door handles to the glass door. The inside handle mounts on the interior side of the glass, while the outside handle attaches on the exterior side, using the same bolt passing through both pieces.

Insert the bolts through the holes in the glass, position both handles, and tighten them evenly. Make sure the handles sit straight and feels firm, but avoid over-tightening to protect the glass.

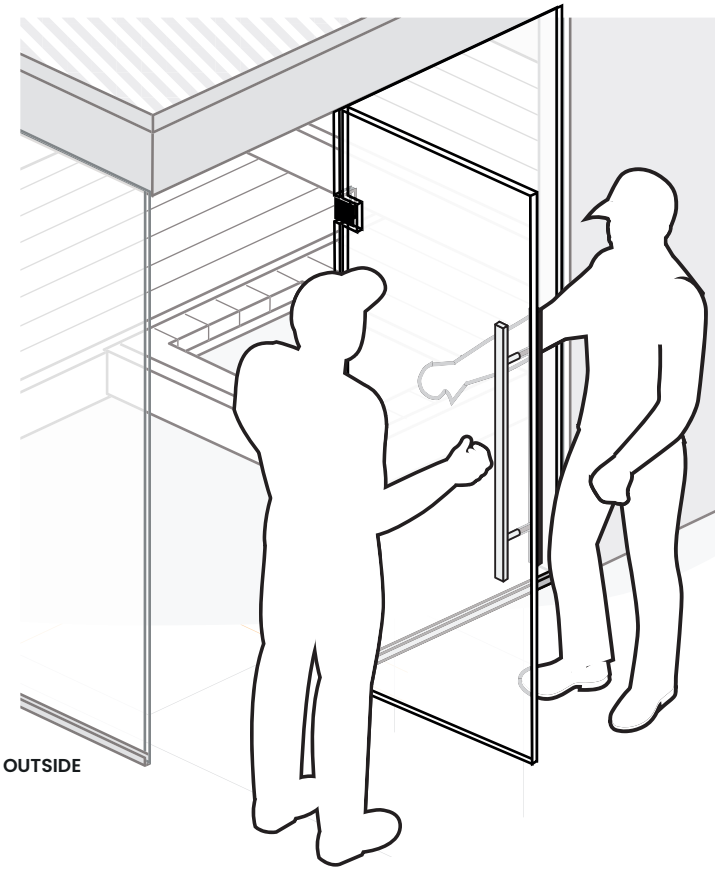

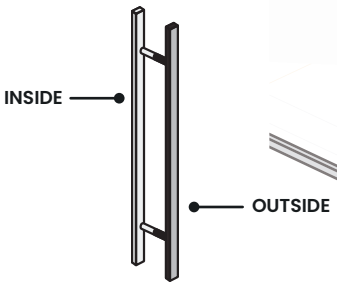

5. Installing Heater and Connecting Accessories

Important Electrical Safety Notice

All electrical work in the sauna—including the heater, LED lighting, controller, and power supply wiring—must only be conducted by a licensed electrician. Saunas operate in high humidity and high temperature environments, which require the correct cable types, proper grounding and secure connections to ensure safe operation.

For all wiring tasks, please refer to the Harvia wiring schematics and installation instructions provided with the heater and control unit. These documents contain essential information such as wire specifications, fuse requirements, sensor placement, and connection diagrams.

Incorrect installation can damage equipment or create safety risks. Always ensure the wiring is performed by a licensed electrician.

A vent diameter of 4.3", must be connected to a ventilation duct leading outside of the wall cavity. This connection is essential to safely remove warm, moist air from the sauna structure.

If moist air is not directed out of the wall space, condensation can accumulate inside the construction, which may lead to moisture damage, reduced insulation performance, or long-term material degradation. Use a suitable ventilation duct or pipe of the same diameter. Ensure the duct leads directly outside or into a dedicated ventilation system designed to remove moisture.

Proper ventilation is a critical part of the installation and helps ensure long service life, safety, and optimal sauna performance.

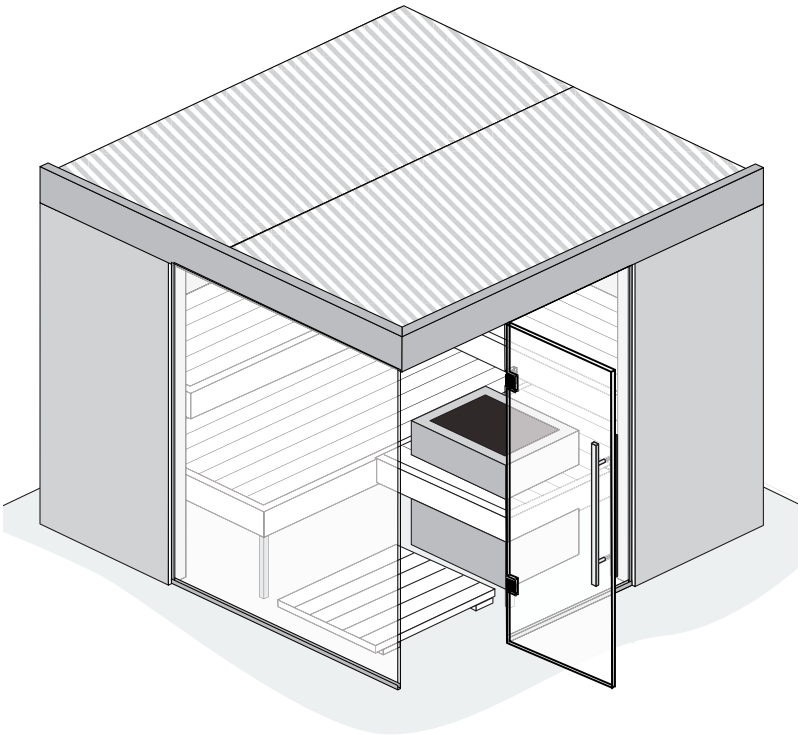

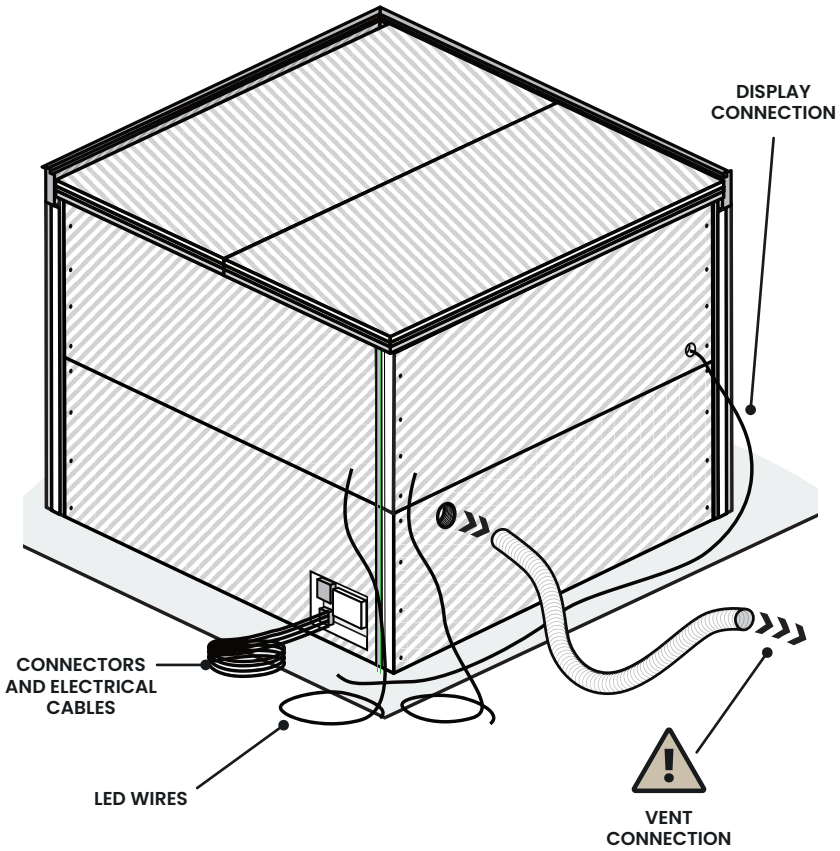

Product Warranty

Every Thermasol sauna is backed by a limited warranty. For full coverage details, visit thermasol.com/warranty.

Make Space to Live Well

THERMASOL®

thermasol.com

813314