Ergo-Series EE8G Barrel Sauna
Full Glass Front 79D" x 90H"

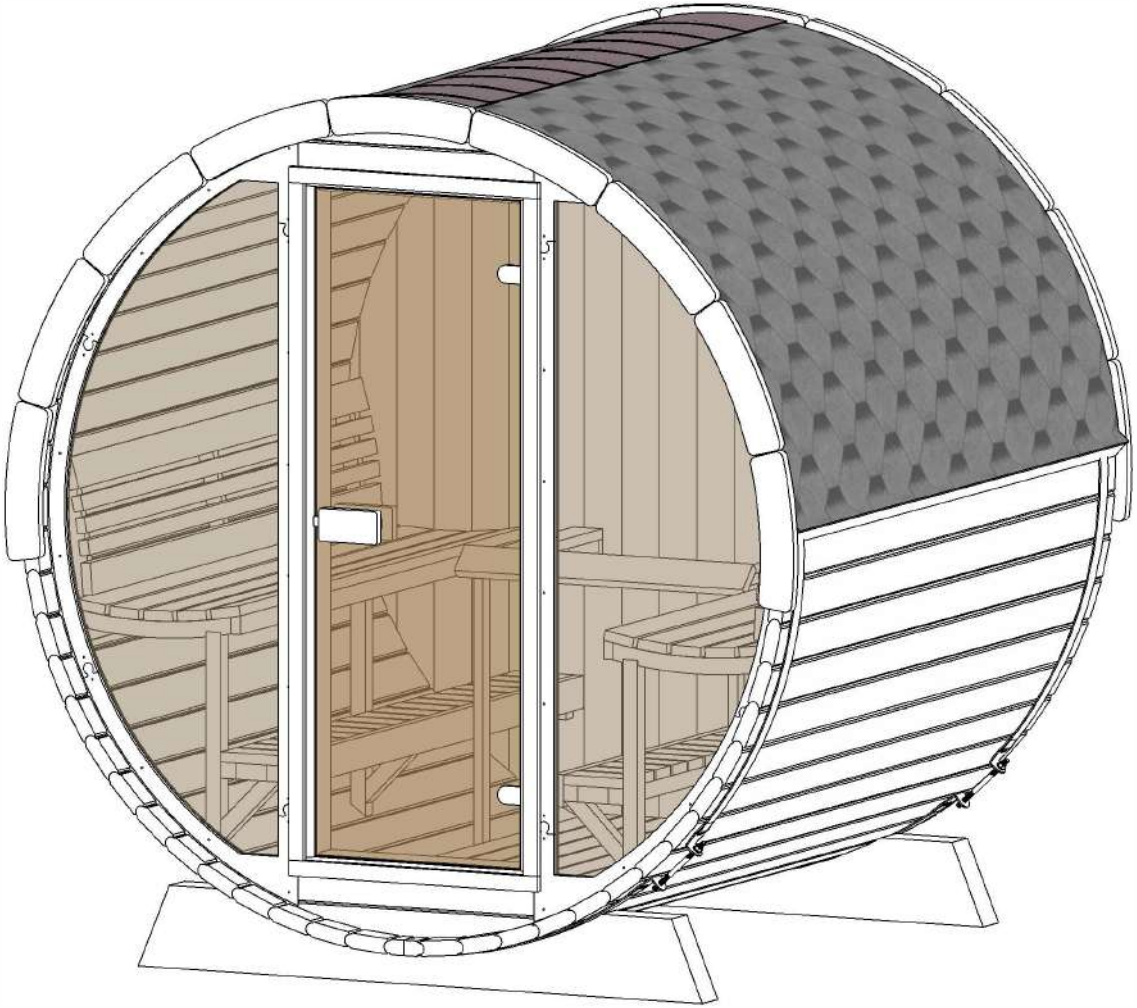

Note: Please read manual before construction

REV: 3.0_9/2024

Tools needed

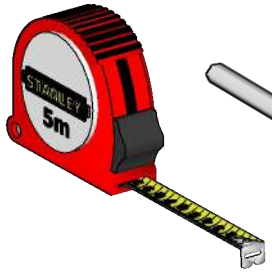

Measuring tape

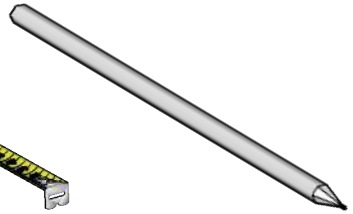

Marker pen

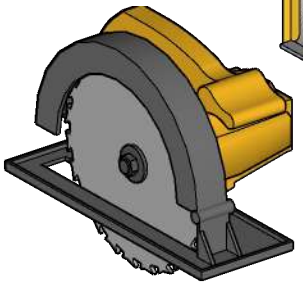

Circular saw

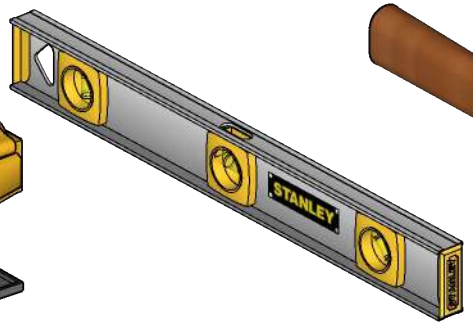

Water level

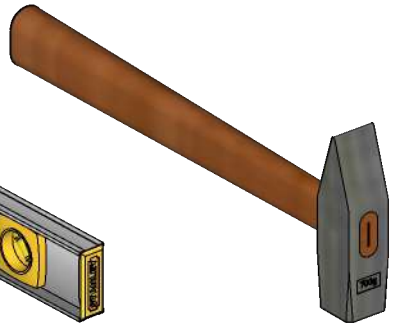

Hammer

Extra hands

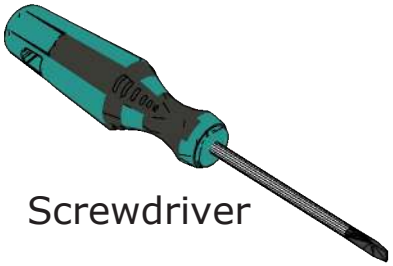

Screwdriver

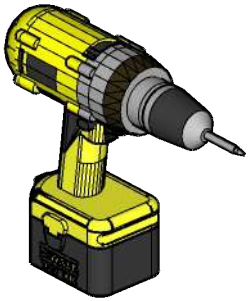

Drill

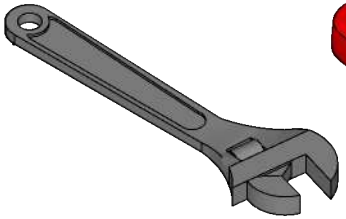

Cresent wrench

Utility knife

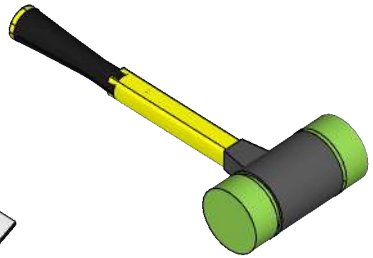

Rubber mallet

Ratchet strap

saunalife

Ergo-Series EE8G Barrel Sauna
79D" x 90H"

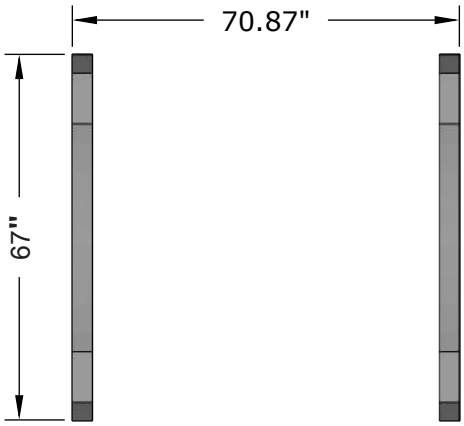

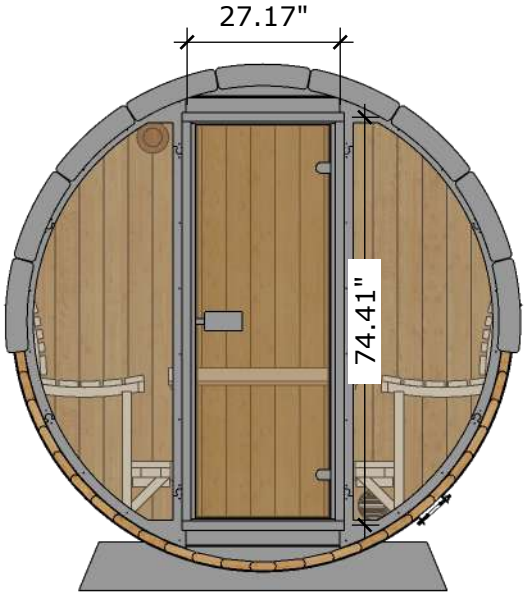

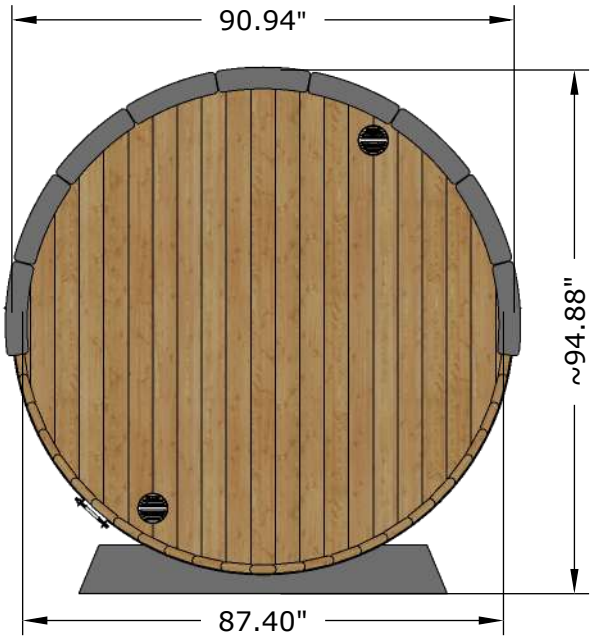

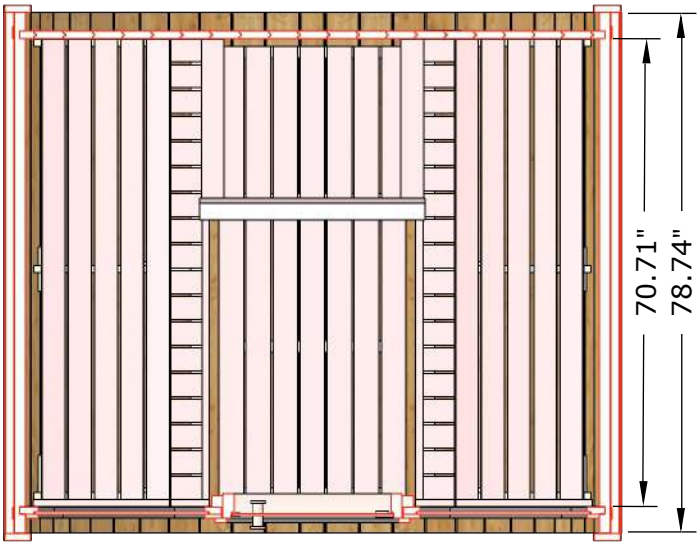

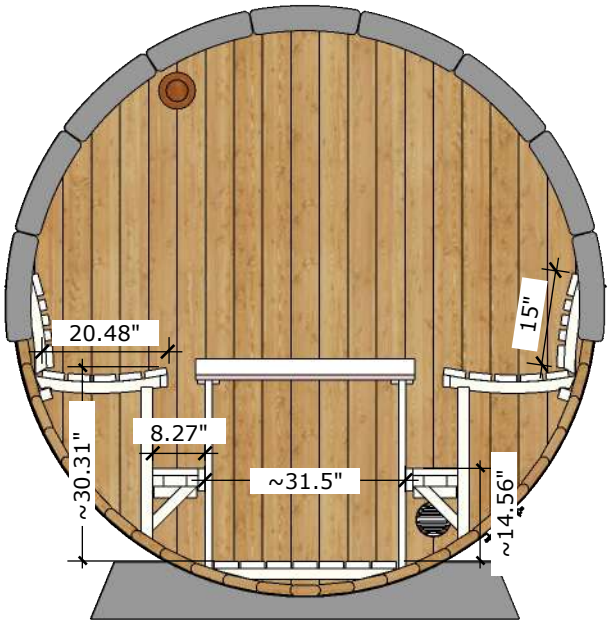

1765 lbs..

Details list 1/4

DET 1 ***Article.*** *K-PT-JAL-226D*	**x2**	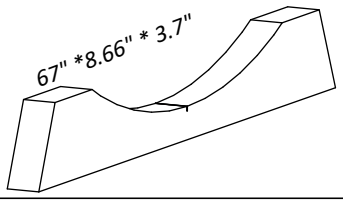	
DET A ***Article.*** *K-STL117/1800*	**x2**	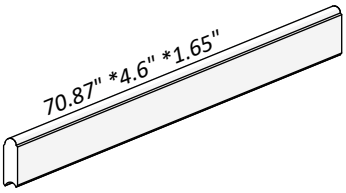	
DET 2 ***Article.*** *T-STL117/2000XLM01*	**x1**	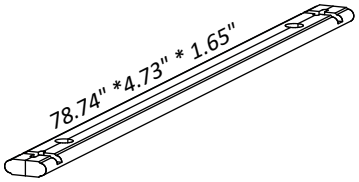	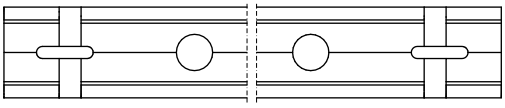
DET W ***Article.*** *MU-TRAPP*	**x2** kmpl	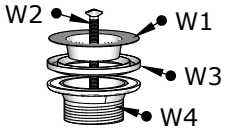	
DET 3 ***Article.*** *T-STL117/2000-01*	**x67**	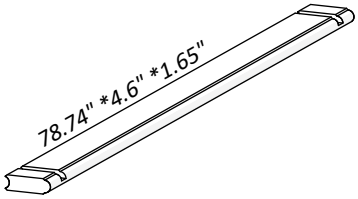	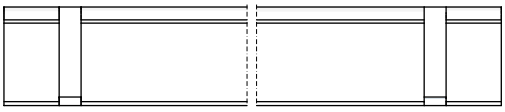
DET S ***Article.*** *26-TE-PR-12/15*	**x2**	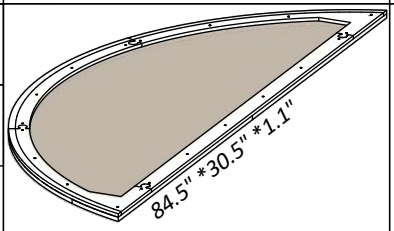	
DET T ***Article.*** *T-SL117/710UK2*	**x2**	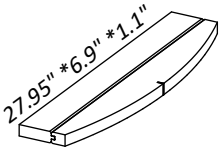	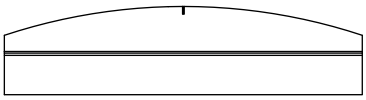
DET U1 ***Article.*** *K-TL94/2200*	**x1**	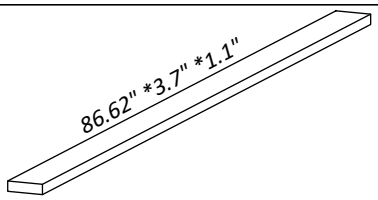	
DET V ***Article.*** *KI-VIN-25/40/40-ZN*	**x4**	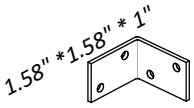	
DET Y1 ***Article.*** *T-26-PTS/28-V*	**x1**	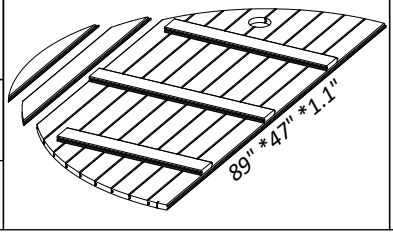	

Details list 2/4

DET Y2 ***Article.*** *T-26-PTS/28-P*	**x1**	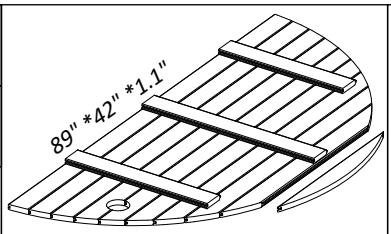	
DET U2 ***Article.*** *K-TL94/2000*	**x1**	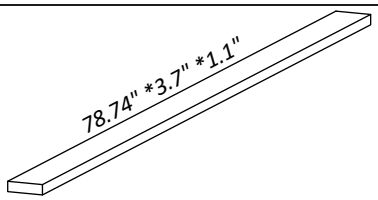	
DET 6 *Det. 2 jääk.* ***Article.*** *T-STL117/2000XL-01*	**x2**	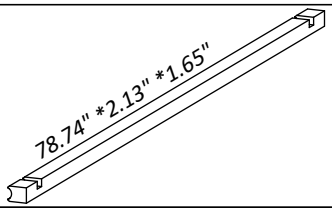	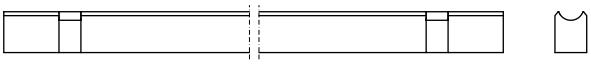
DET 6c/d/e/f *Lõigata ühest STL-ist.* ***Article.*** *T-STL117/2000KO-01*	**x1**	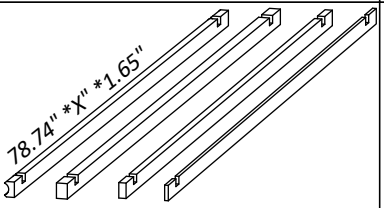	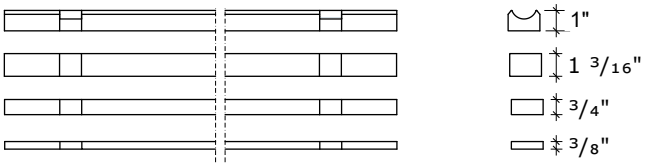
DET B ***Article.*** *MU-VIT7040-KLZN*	**x2**	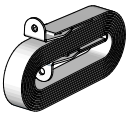	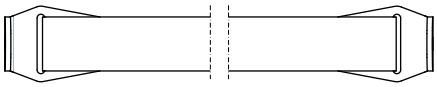
DET G ***Article.*** *MU-VENT-100-PU*	**x1**		
DET F ***Article.*** *MU-VENT-100-ZN*	**x3**		
DET 10 ***Article.*** *TL-LAMOD-1791-KA01*	**x2**	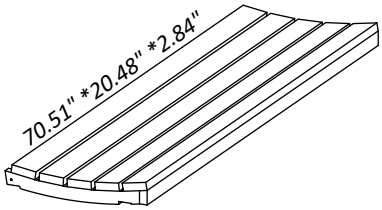	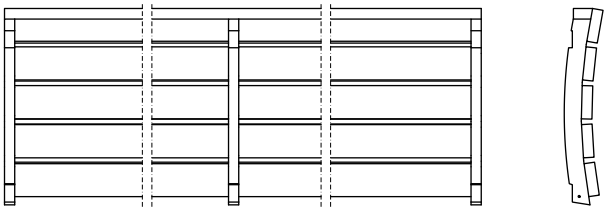
DET 10a ***Article.*** *K-HP44/635XP-XP-V*	**x2**	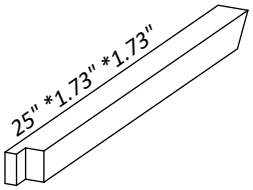	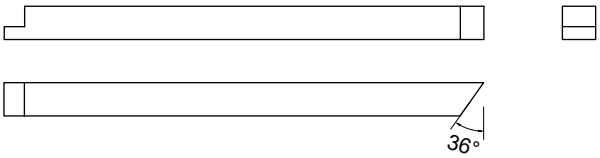
DET 10b ***Article.*** *K-HP44/635XP-XP-P*	**x2**	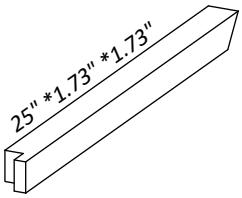	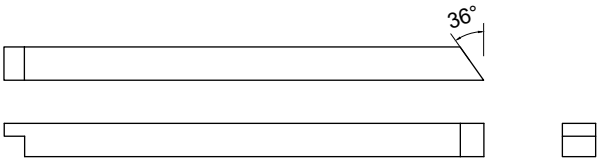

Details list 3/4

DET 11 ***Article.*** *TL-STMOD-1770-KA01*	**x2**	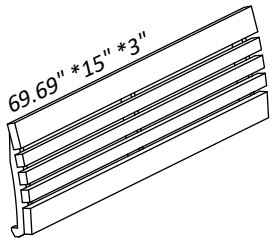	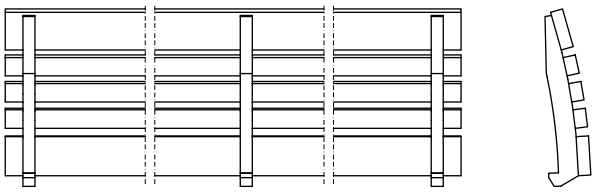
DET 10c ***Article.*** *K-HP44/170*	**x6**	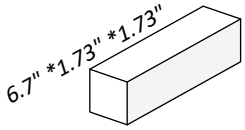	
DET 12 ***Article.*** *TL-LAMOD-1791/210*	**x2**	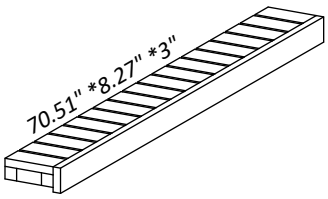	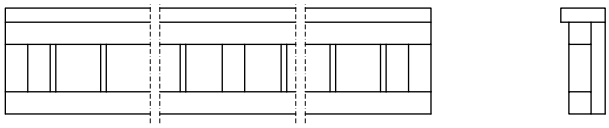
DET 12a ***Article.*** *K-HP44/250XP-XP*	**x4**	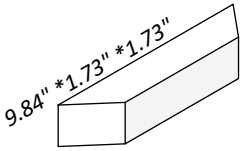	
DET 14 ***Article.*** *TL-PÕMOD-1730/720*	**x1**	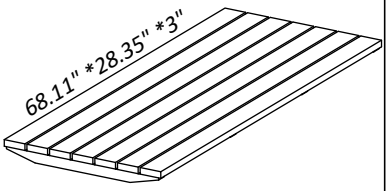	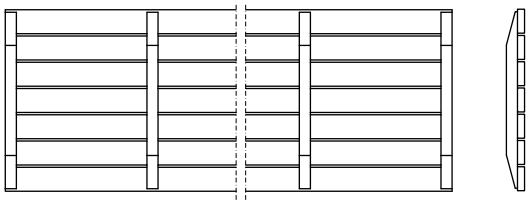
DET 15a ***Article.*** *TL-LAV90/670XP*	**x2**	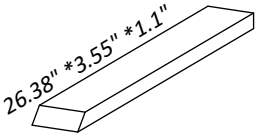	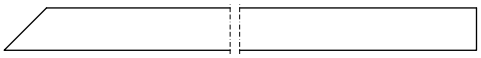
DET 15b ***Article.*** *TL-LAV42/90*	**x2**	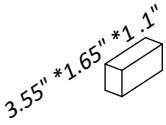	
DET 15c ***Article.*** *TL-LAV42/770XP*	**x2**	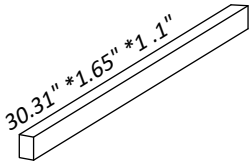	
DET 15d ***Article.*** *TL-LAV90/870*	**x1**	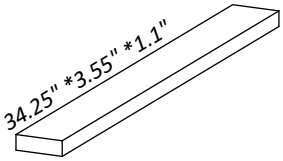	
DET 21 ***Article.*** *U-TH7/19-PR*	**x1**	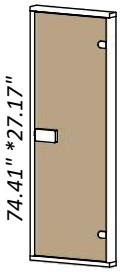	

Details list 4/4

DET 21c ***Article.*** *K-HP44/1890*	**x2**	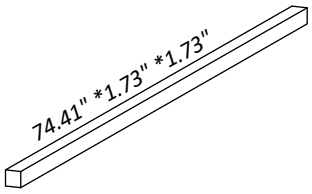	
DET 21d ***Article.*** *K-HP44/780*	**x2**	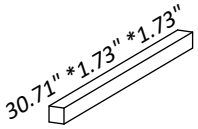	
DET 21a ***Article.*** *K-HL44/1860*	**x2**	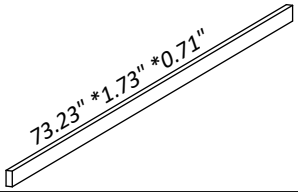	
DET 21b ***Article.*** *K-HL44/750*	**x2**	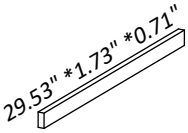	
DET 22 ***Article.*** *T-STL-2000-XX*	**x2**	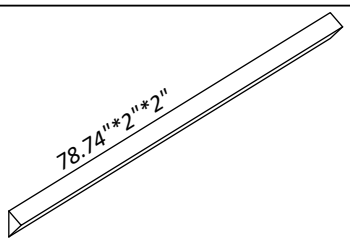	
DET N ***Article.*** *KAT-HAR-MUST*	**x8**	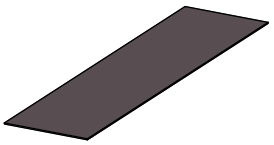	
DET O ***Article.*** *KAT-SIN-MUST*	**x55**	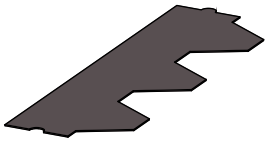	
DET 21d ***Article.*** *MU-OL-SAUN*	**x18**	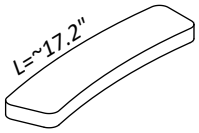	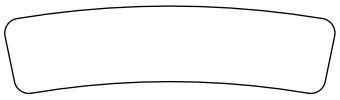

Article.
KI-KERL-12-RV2

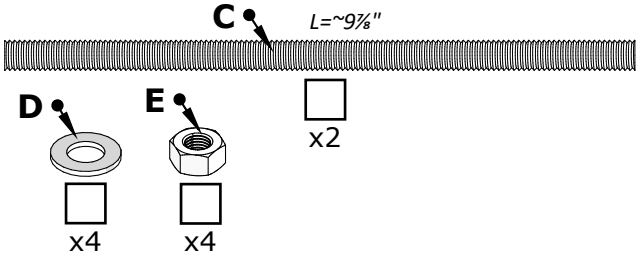

Article.
KI-USA-150-220

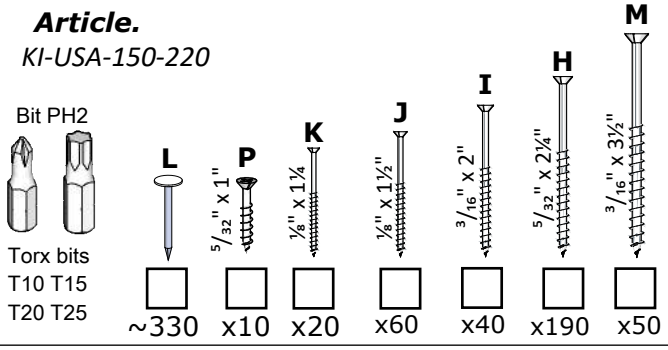

EE8G Barrel Sauna 79D" x 90H"

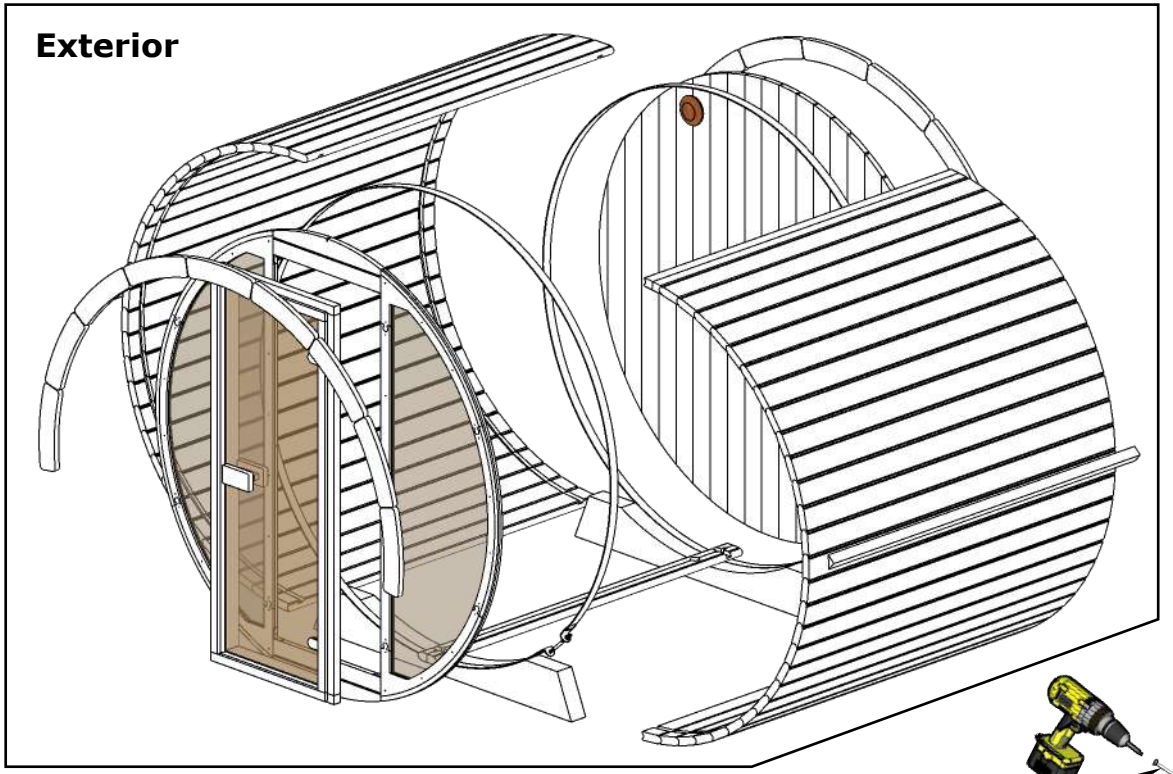

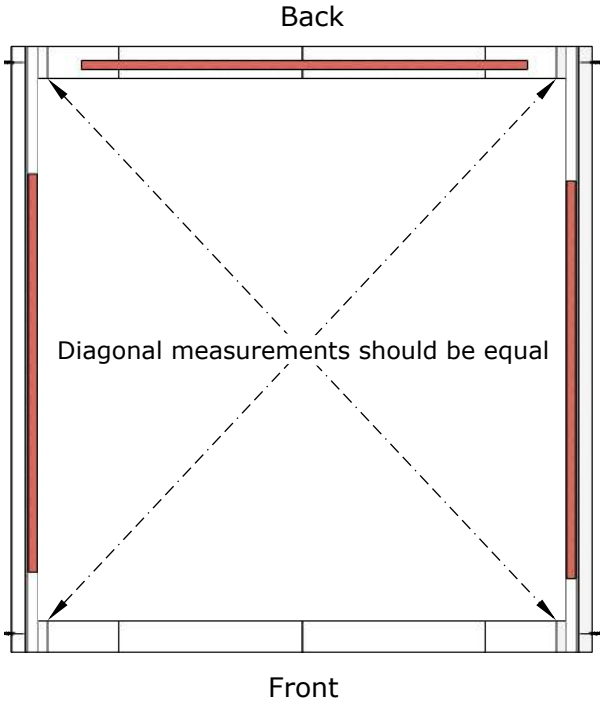

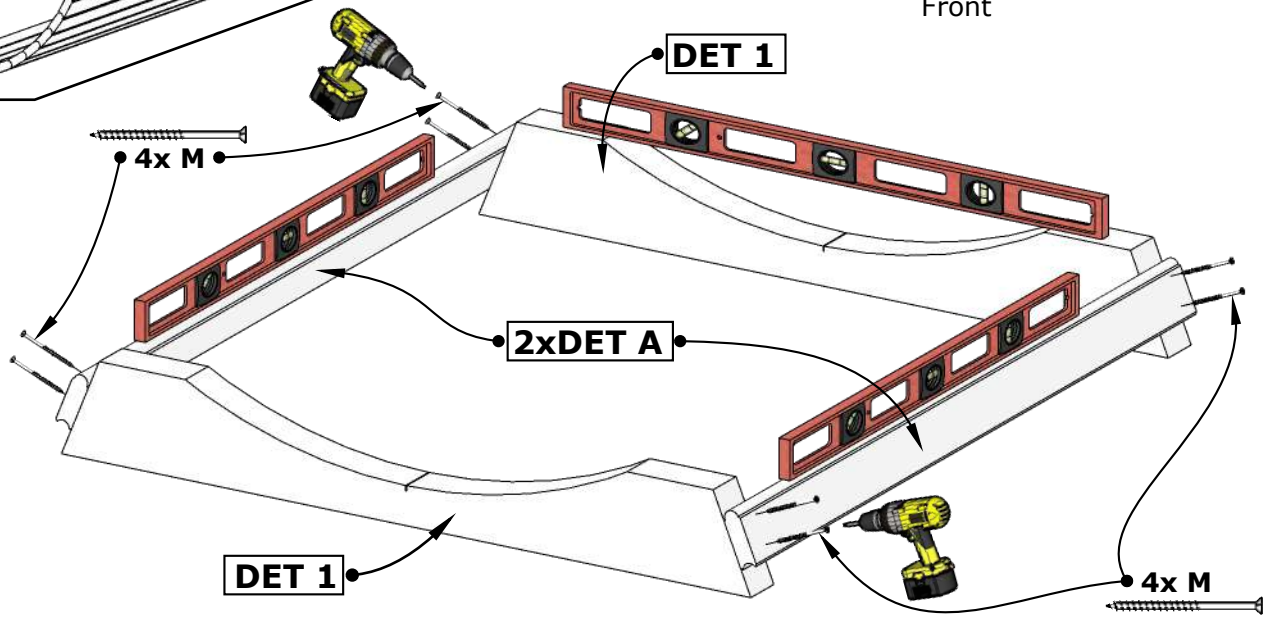

1.

EE8G Barrel Sauna 79D" x 90H"

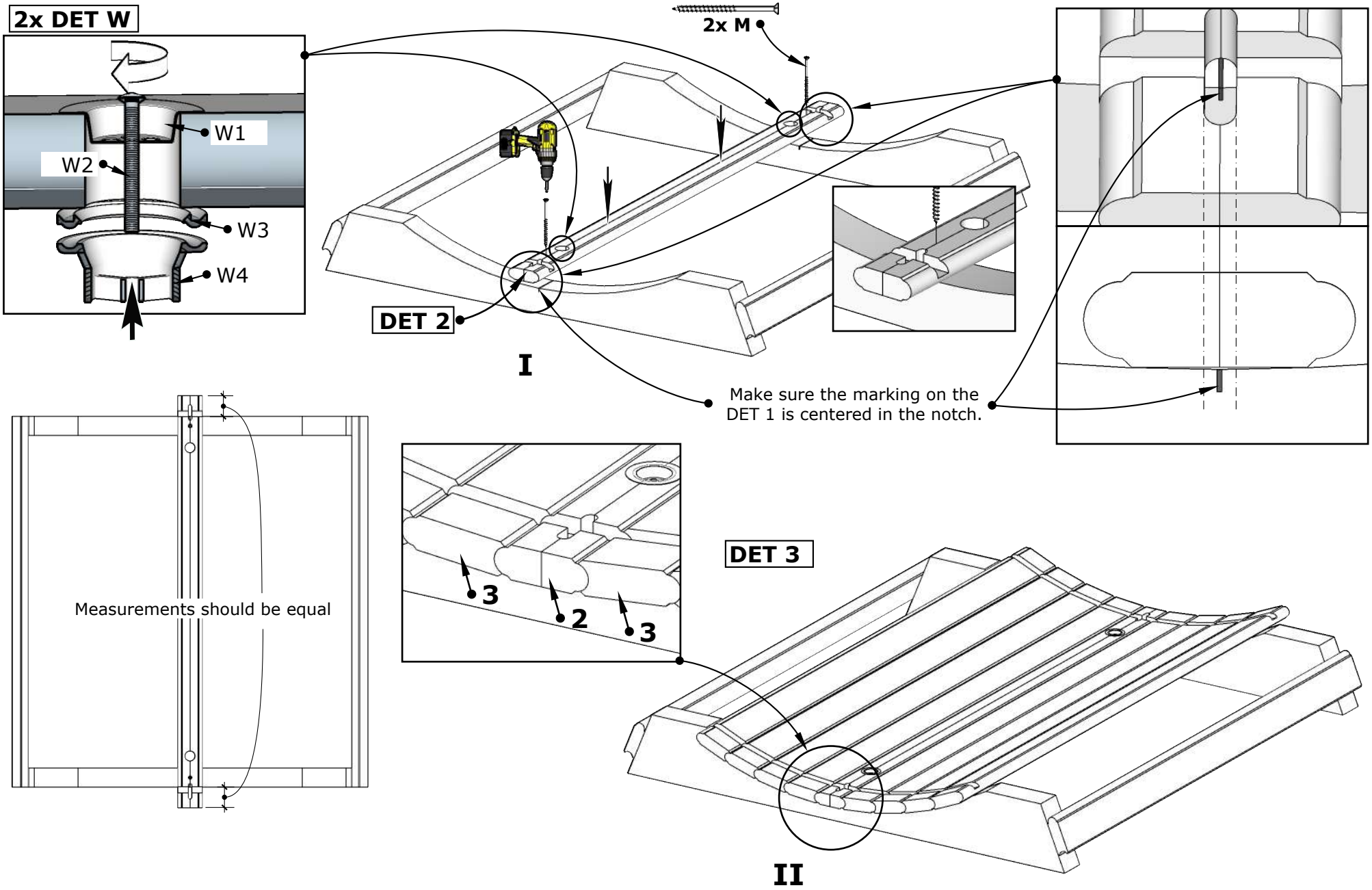

2.

EE8G Barrel Sauna 79D" x 90H"

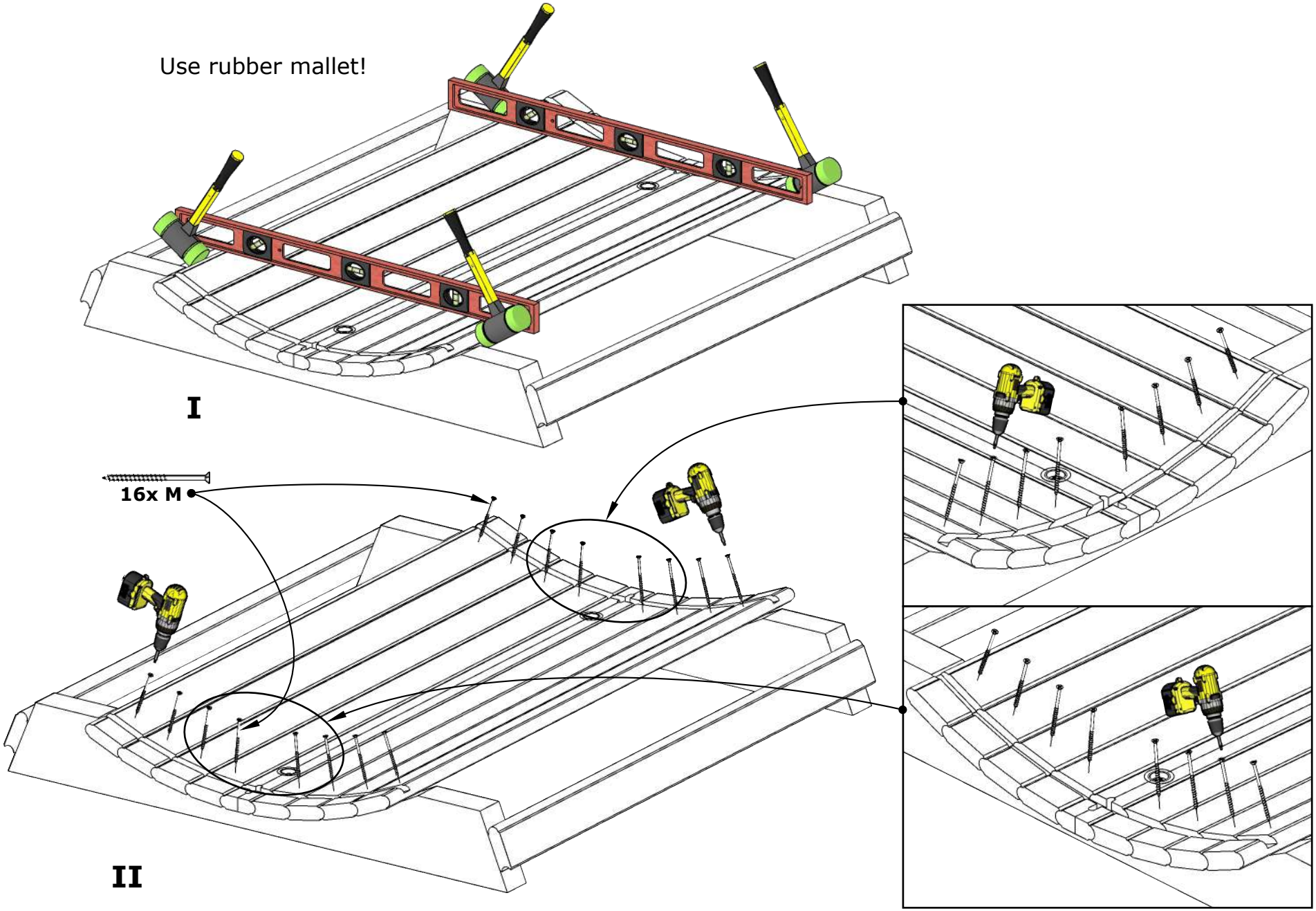

3.

EE8G Barrel Sauna 79D" x 90H"

Front glass-wall assembly

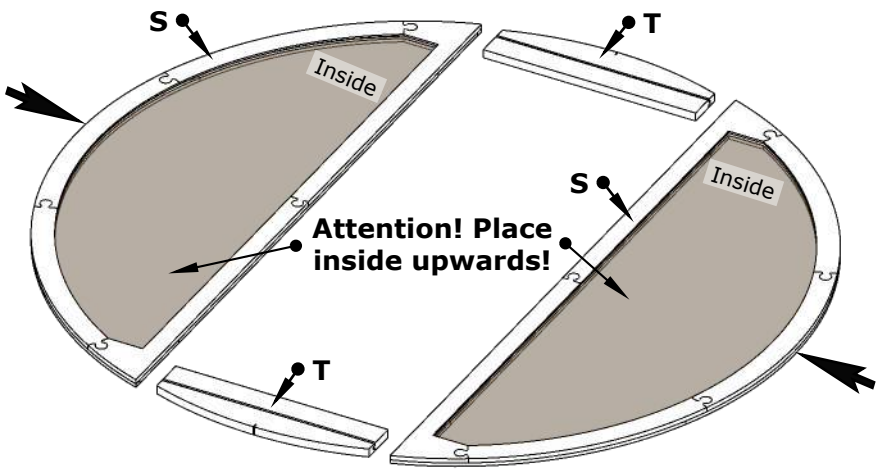

I

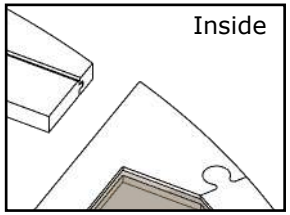

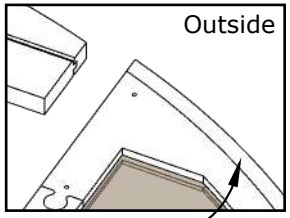

Outside will have an extra notch around the edge.

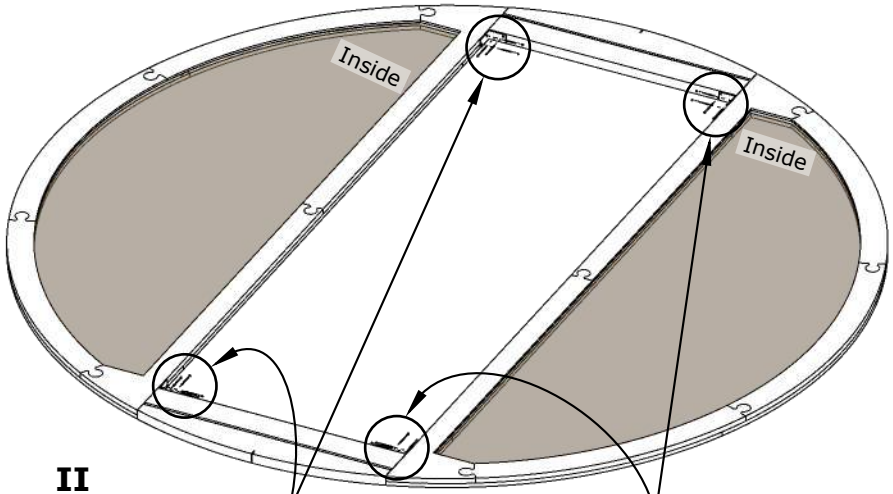

II

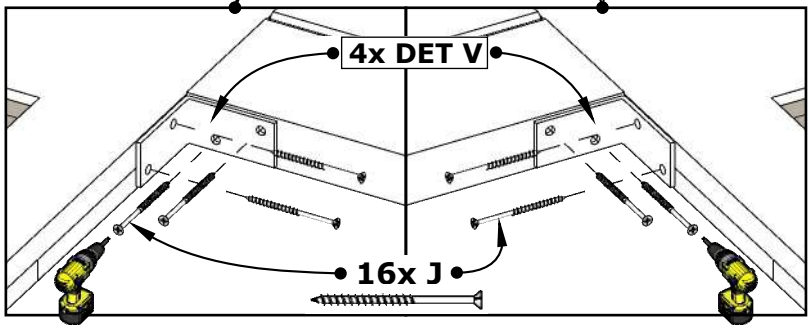

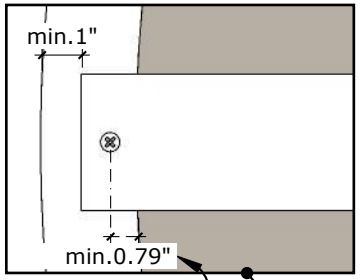

Attention! Be extra careful to not hit the glass!!!

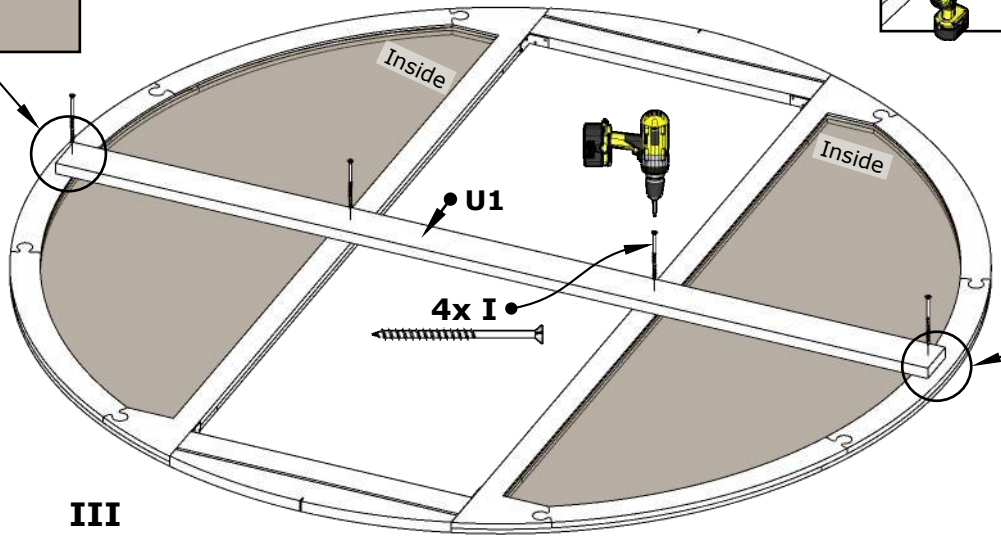

III

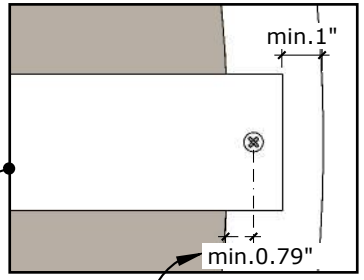

Attention! Be extra careful to not hit the glass!!!

EE8G Barrel Sauna 79D" x 90H"

Wooden back wall assembly

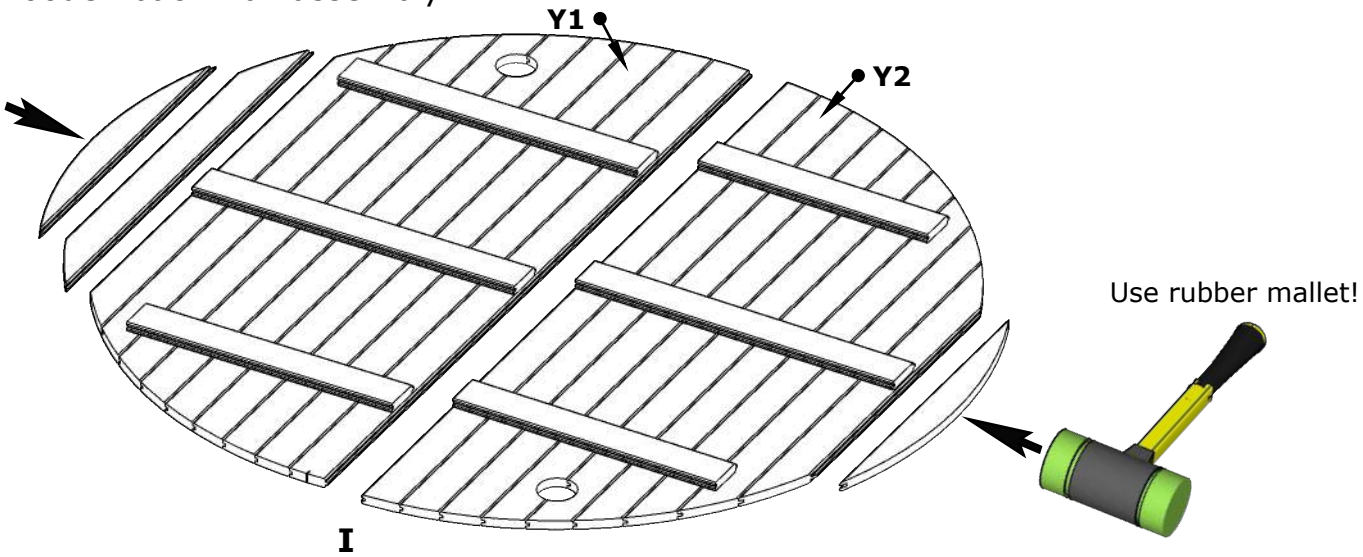

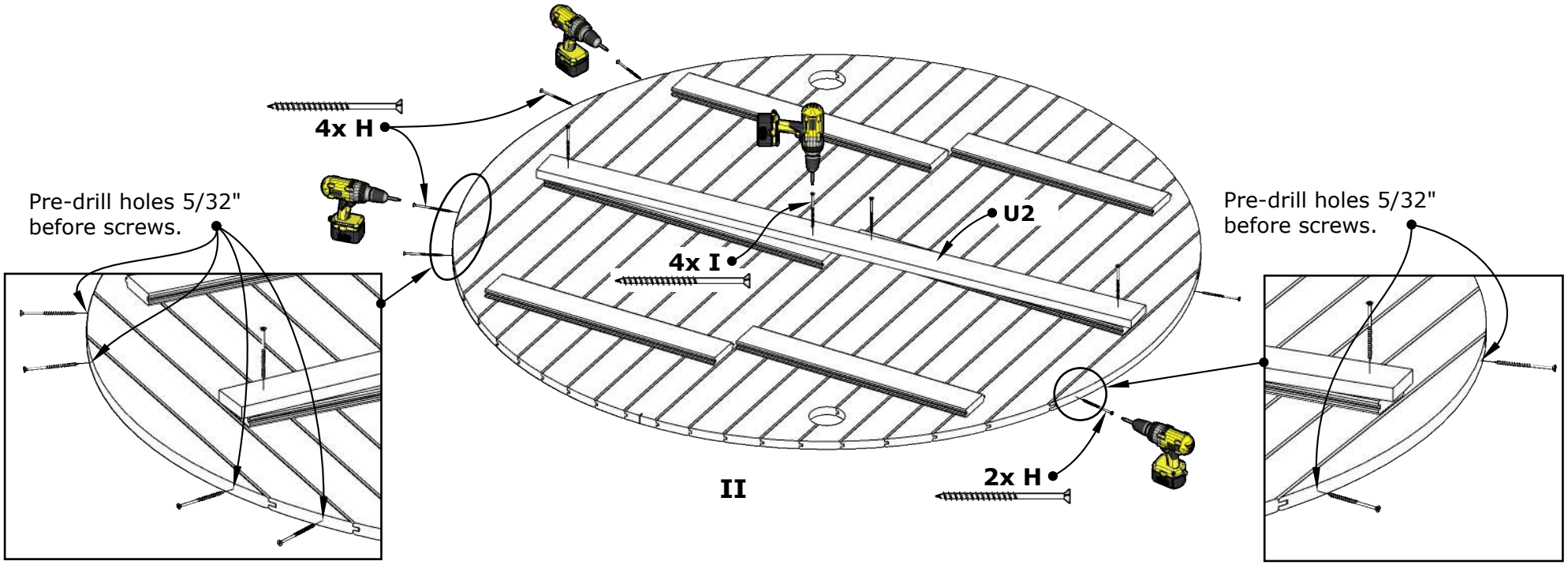

5.

EE8G Barrel Sauna 79D" x 90H"

Use waterlevel

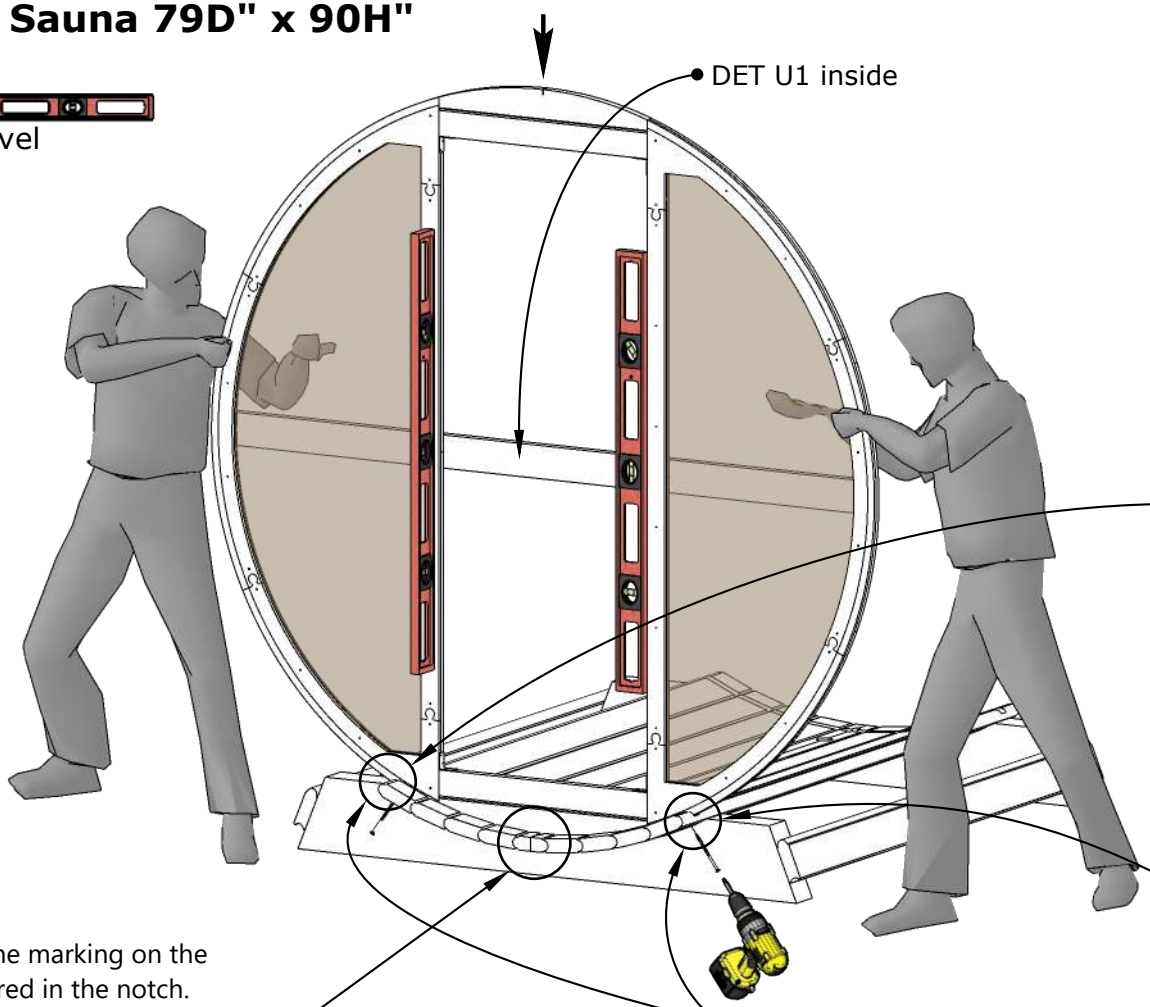

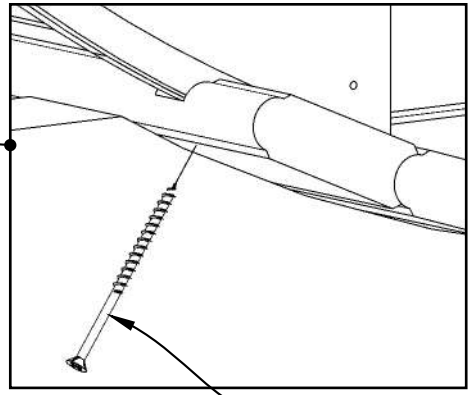

2x H

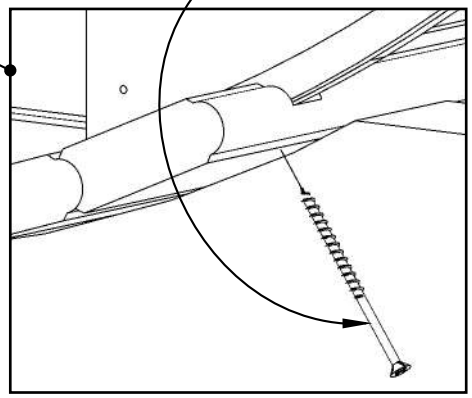

Make sure the marking on the wall is centered in the notch.

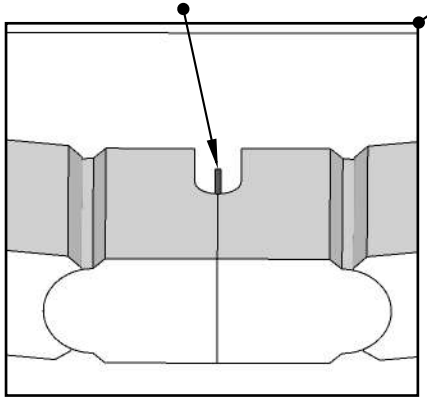

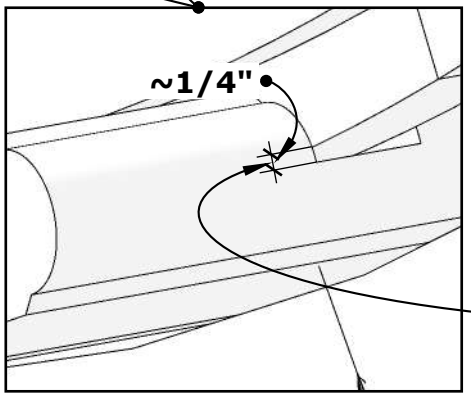

IMPORTANT! Be sure to leave a ~1/4”gap when tightening screws to leave room for adjustment when the outer bands (B) are installed.

EE8G Barrel Sauna 79D" x 90H"

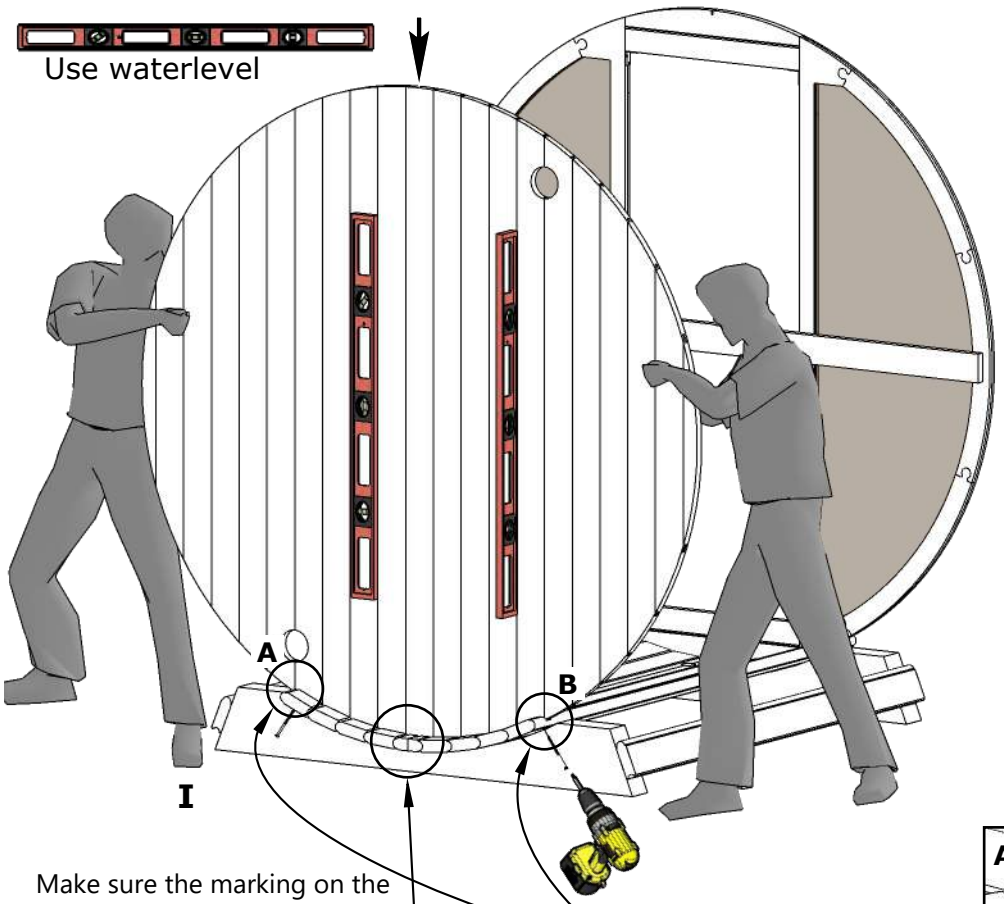

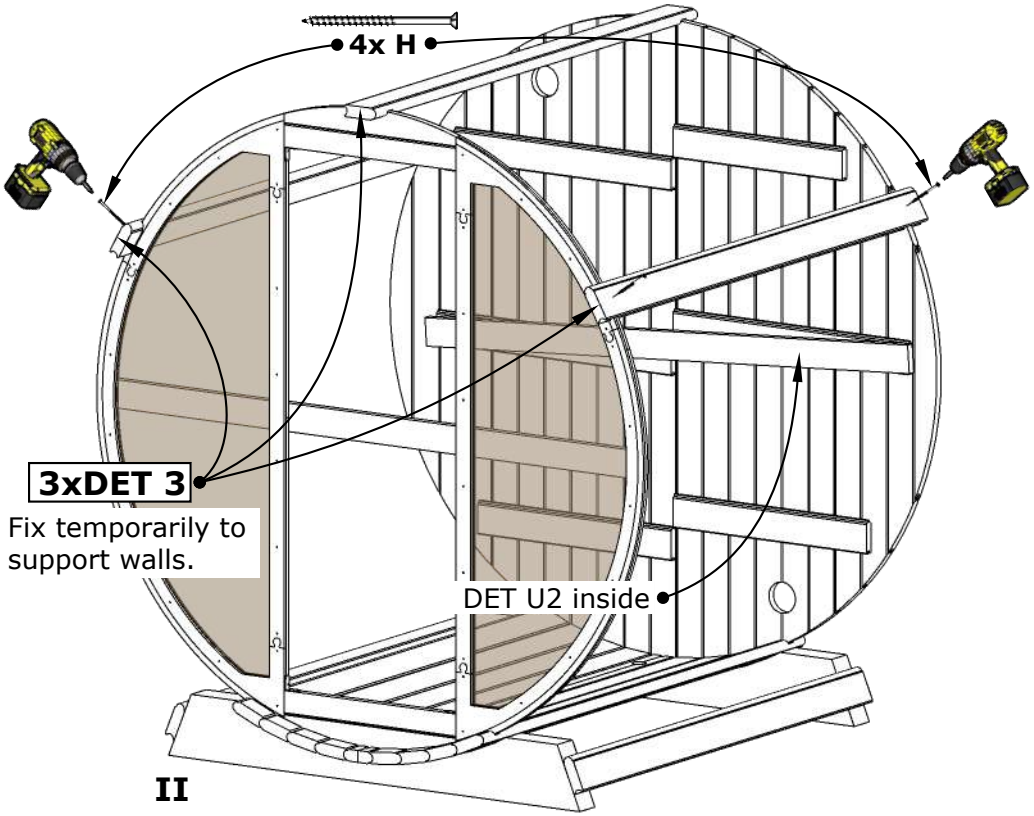

Make sure the marking on the wall is centered in the notch.

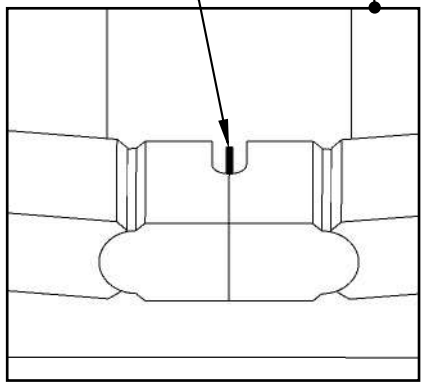

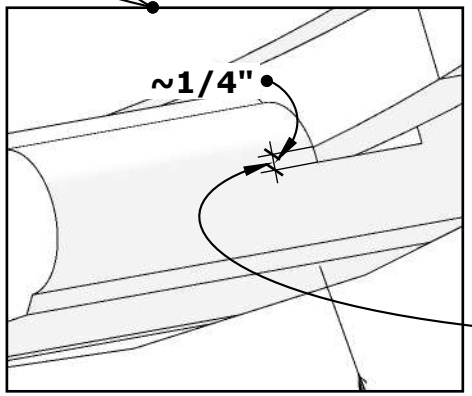

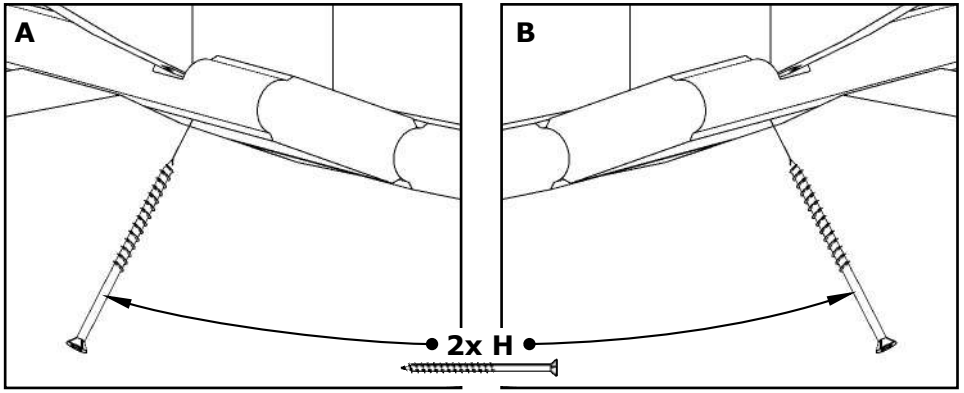

IMPORTANT! Be sure to leave a ~1/4”gap when tightening screws to leave room for adjustment when the outer bands (B) are installed.

EE8G Barrel Sauna 79D" x 90H"

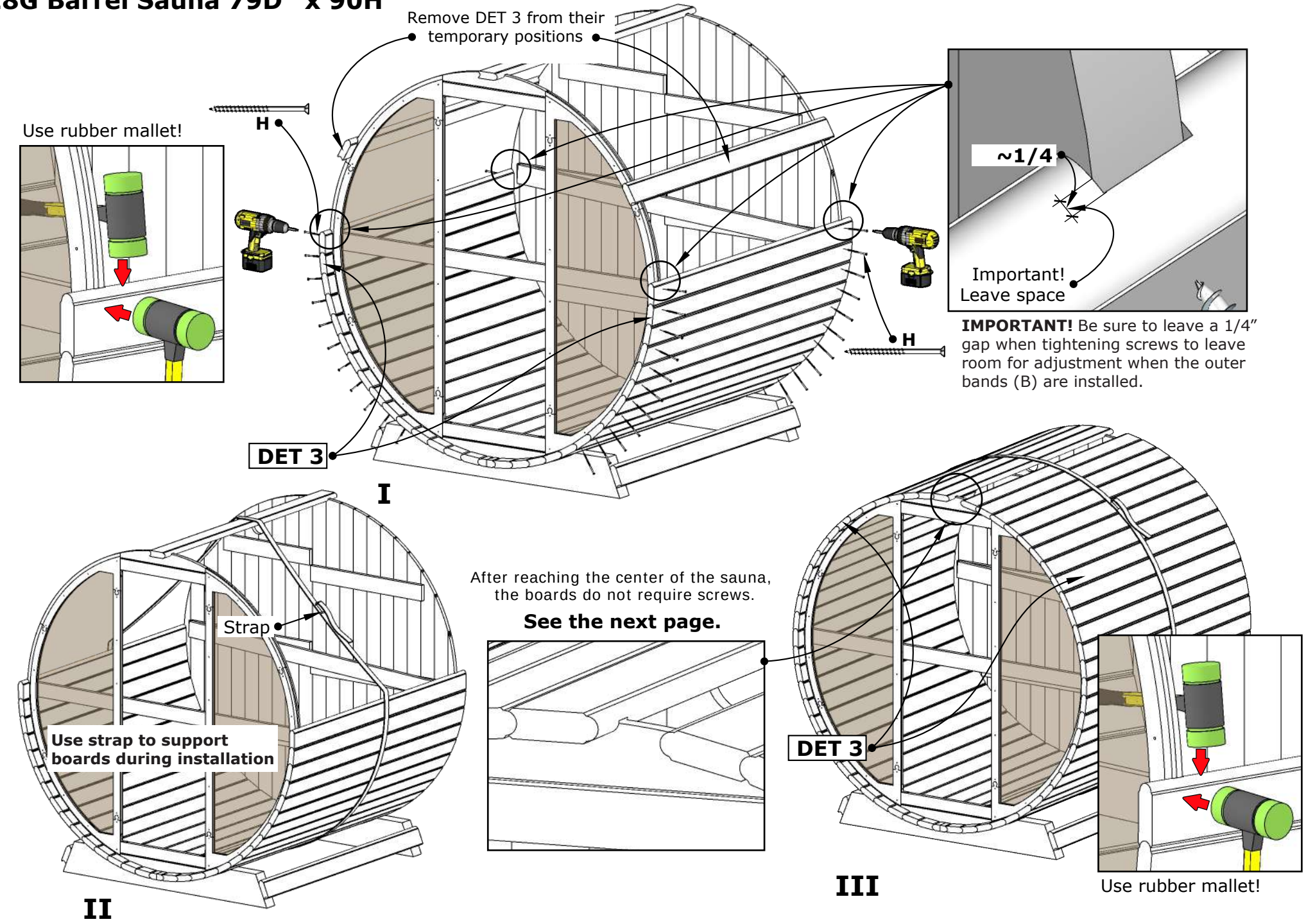

EE8G Barrel Sauna 79D" x 90H"

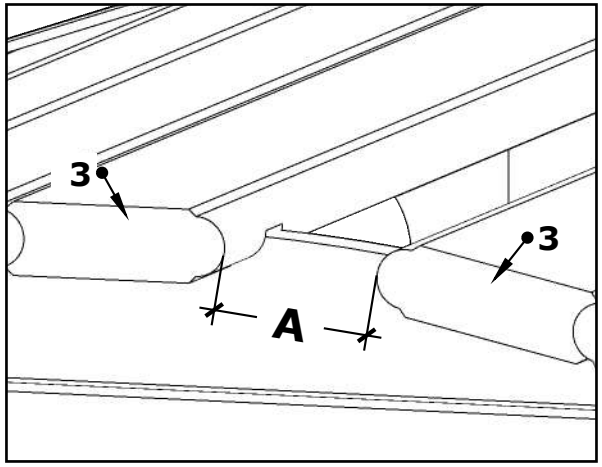

I

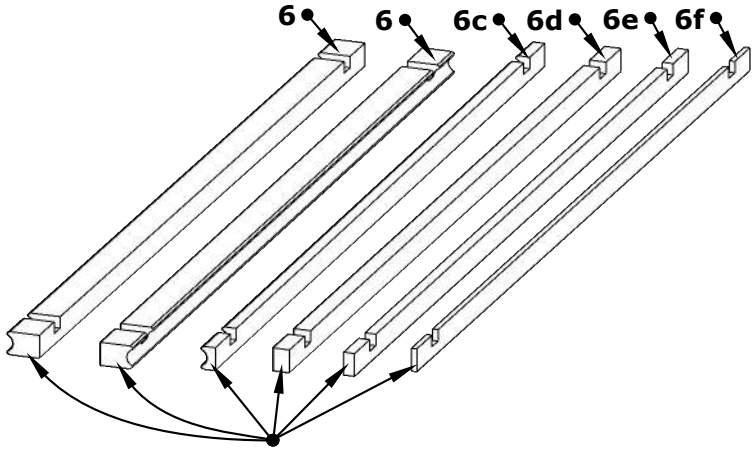

II

Join boards together (as shown in diagram III) that will bridge the width of the "A" gap. It is recommended that the combined boards are approximately 1/4" wider than the gap.

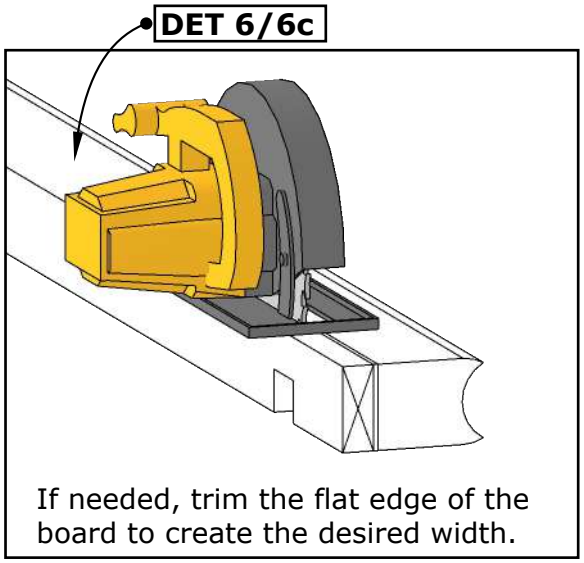

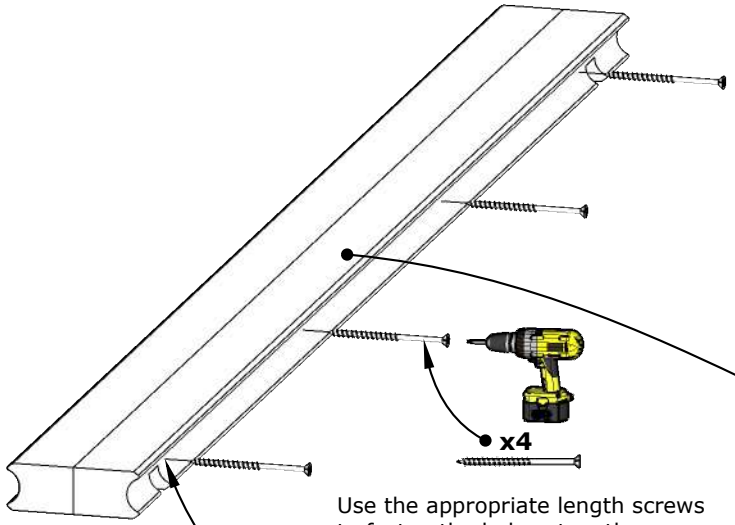

III

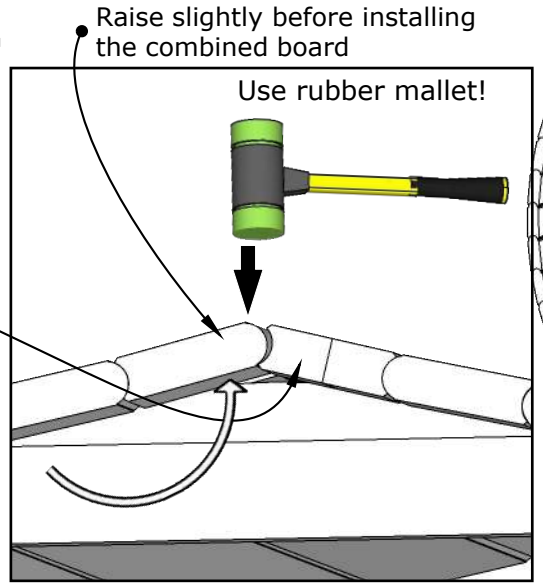

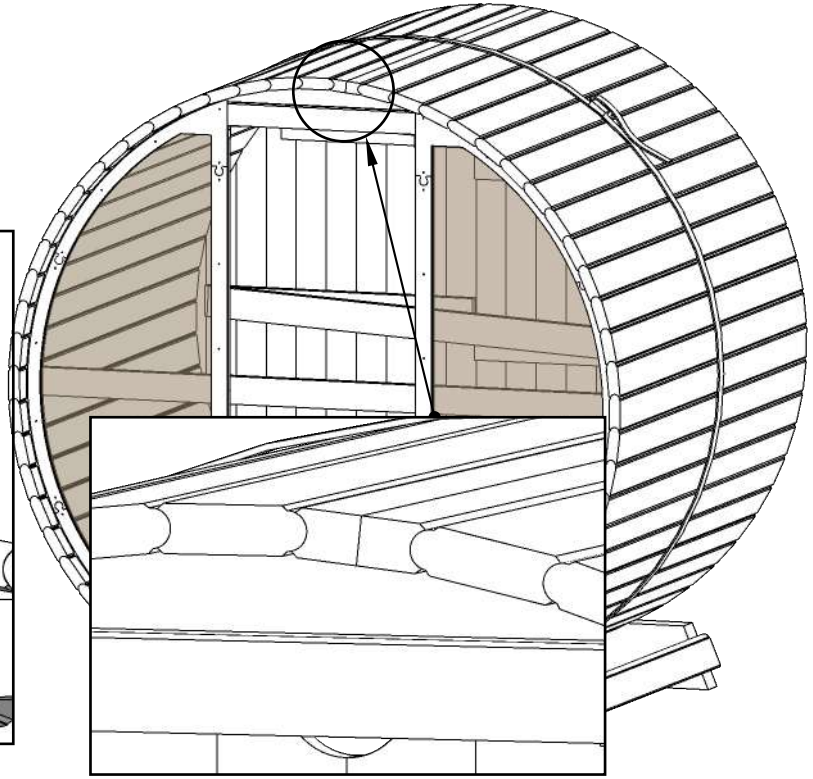

IV

EE8G Barrel Sauna 79D" x 90H"

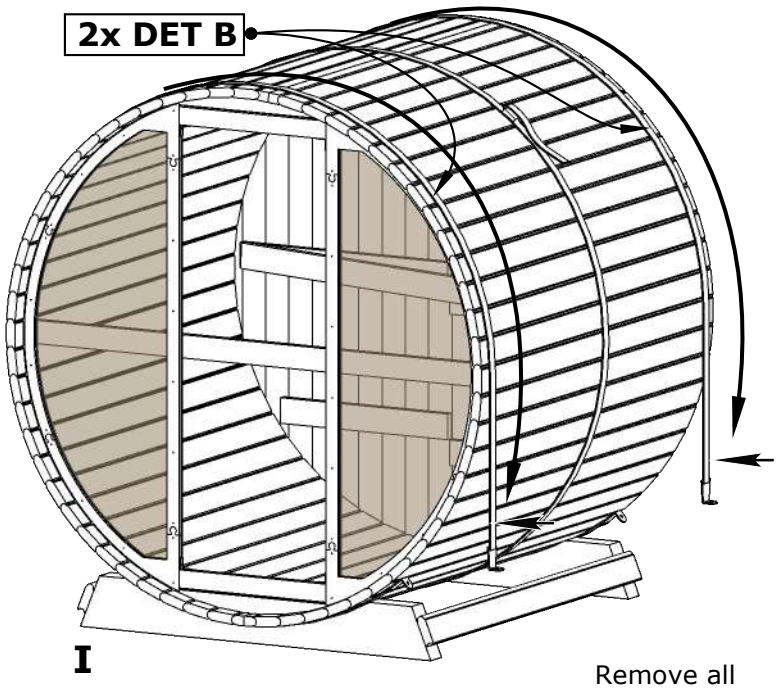

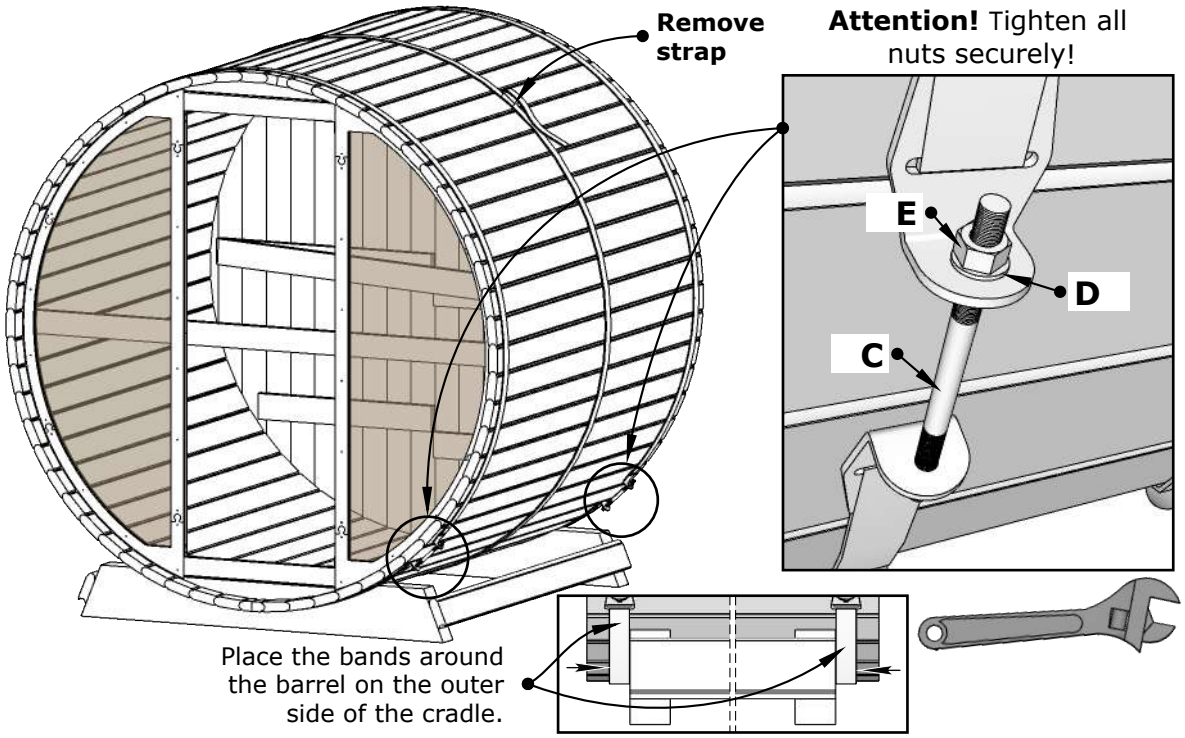

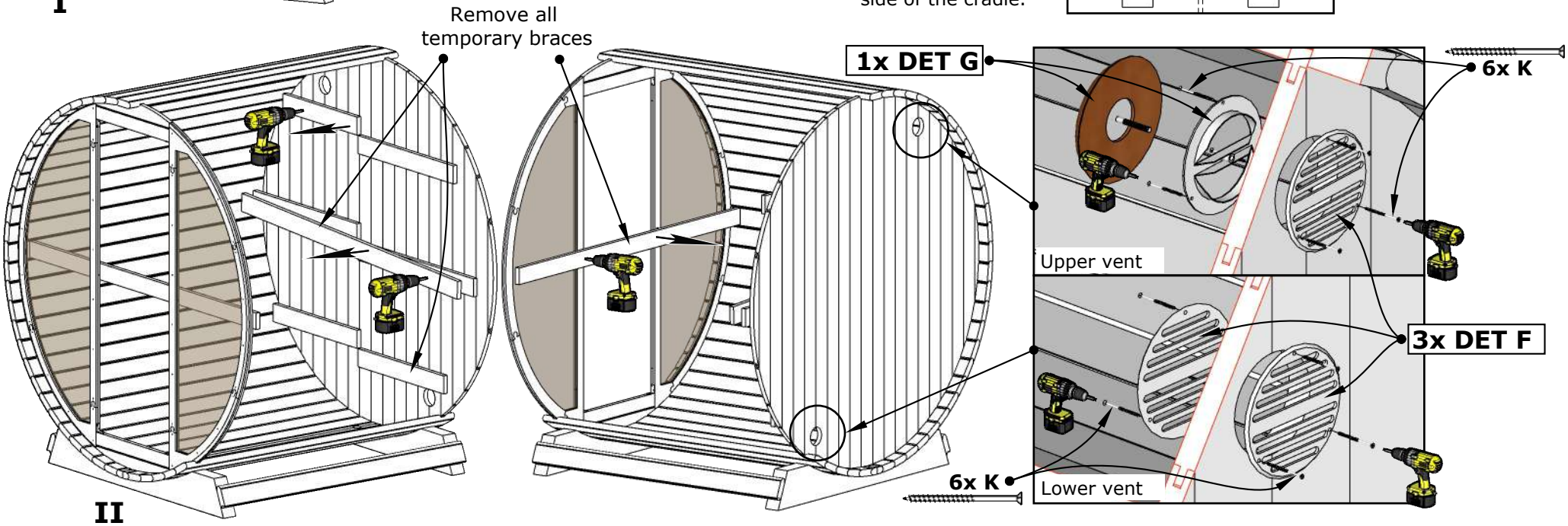

EE8G Barrel Sauna 79D" x 90H"

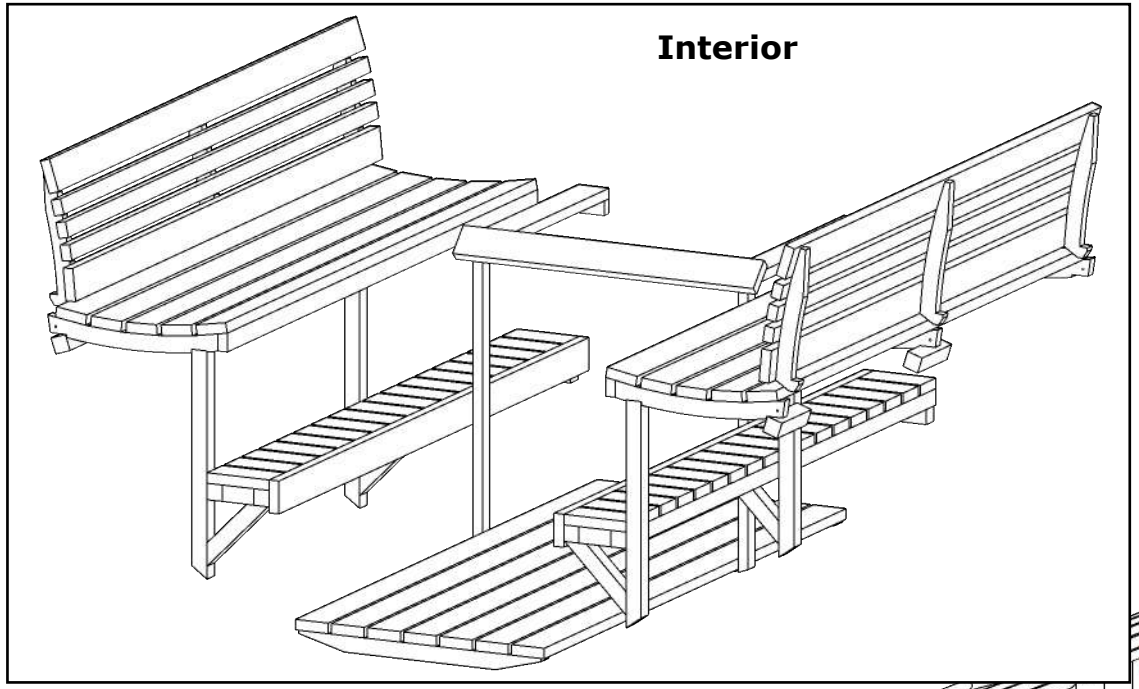

Attention!
Leave ~0.2" gap from back of benching coming into contact with barrel staves!

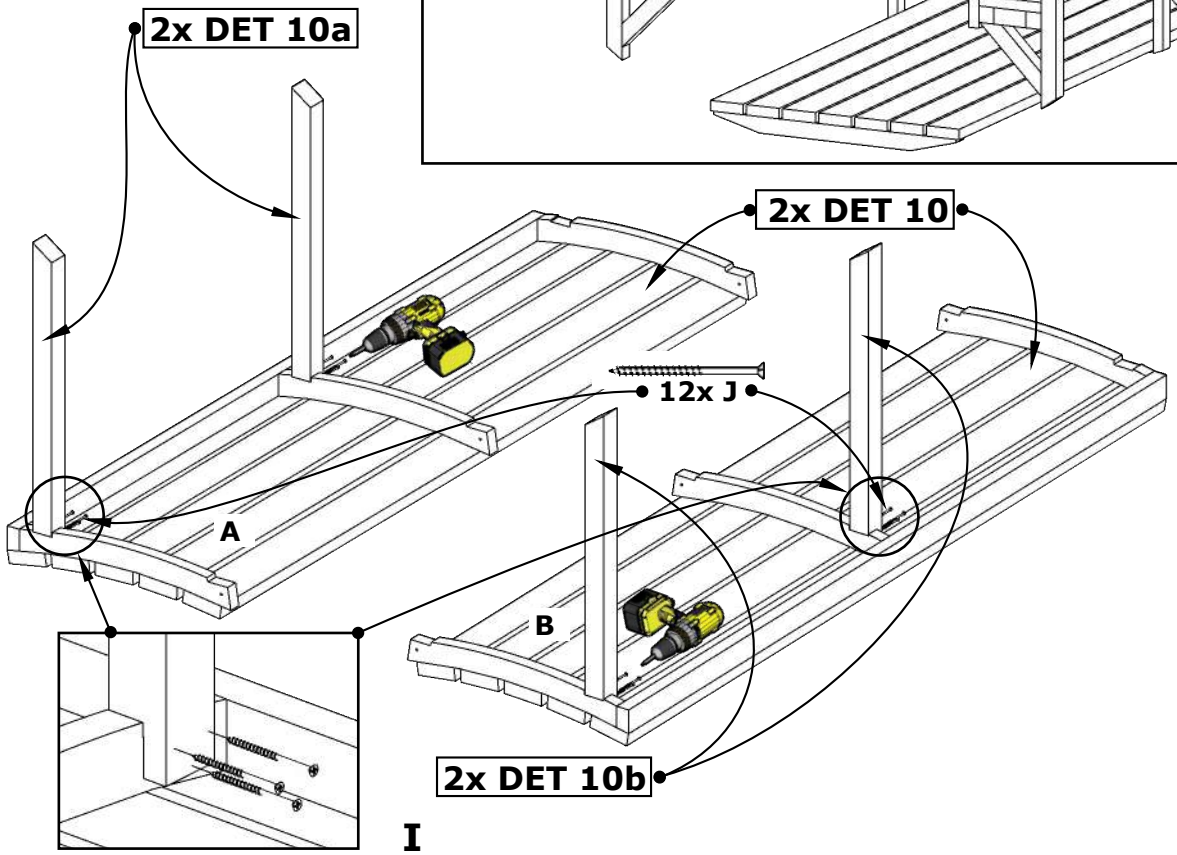

I

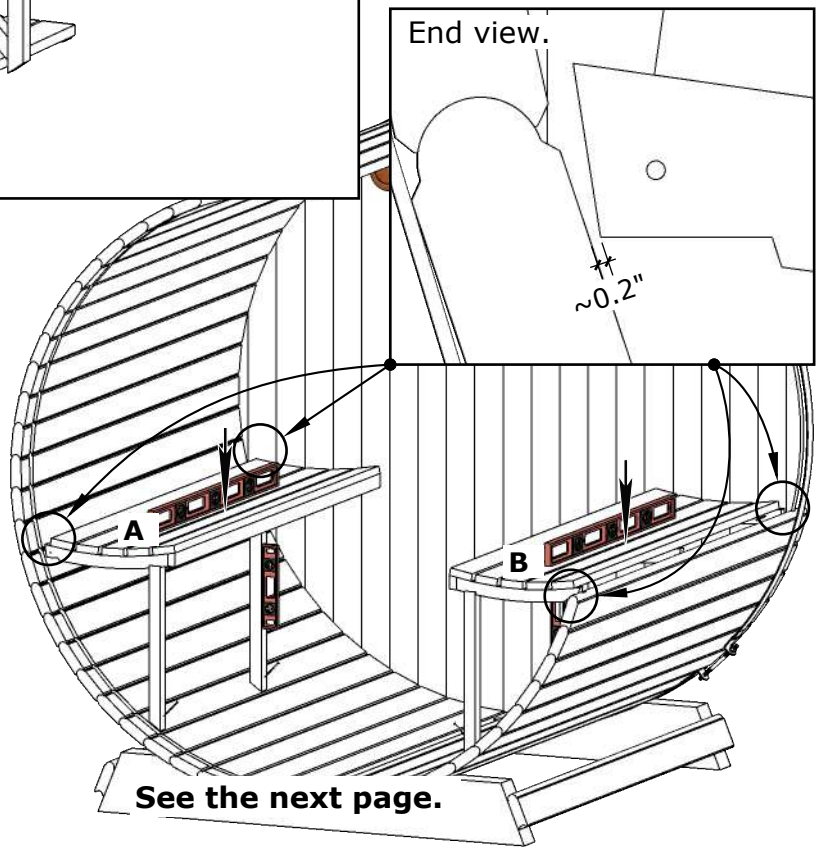

II

EE8G Barrel Sauna 79D" x 90H"

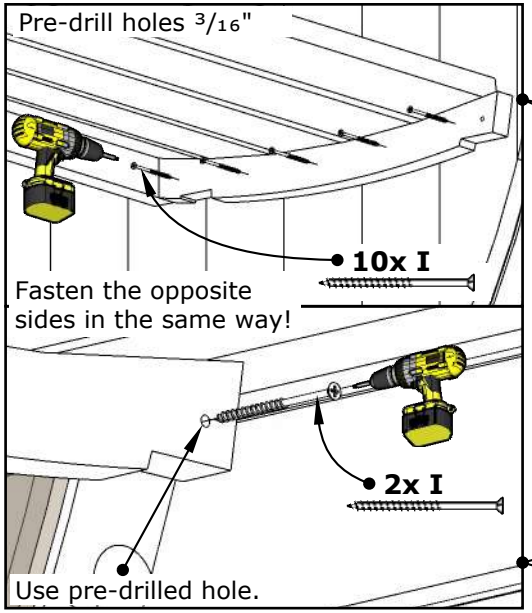

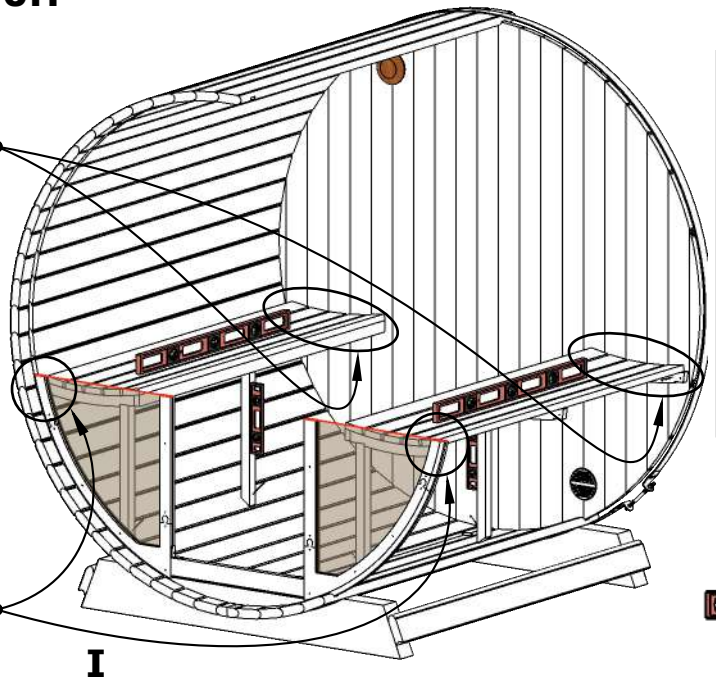

I

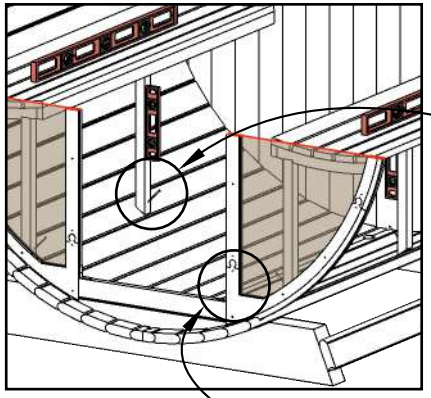

Use level for installation of benches

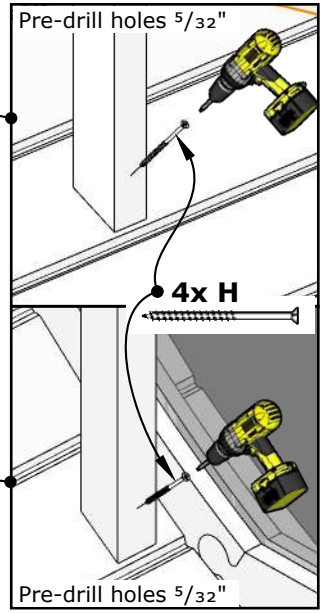

II

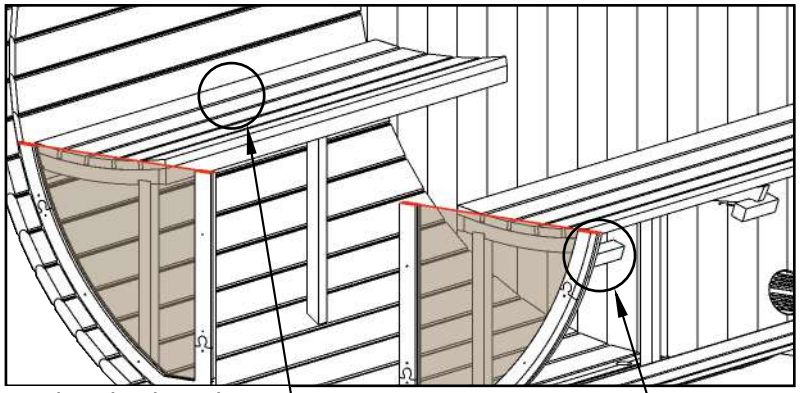

Under the benches

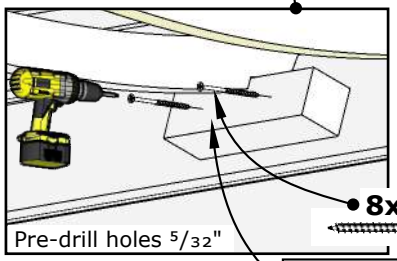

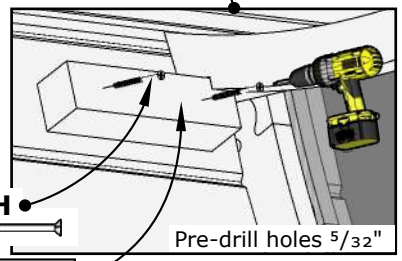

8x H

4x DET 10c

III

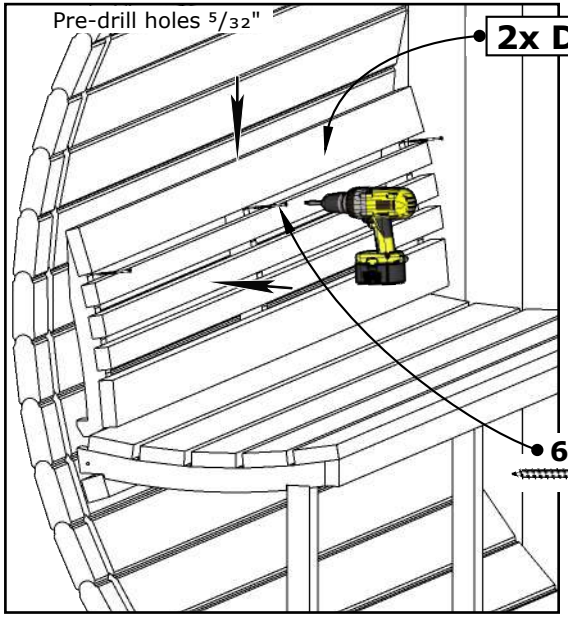

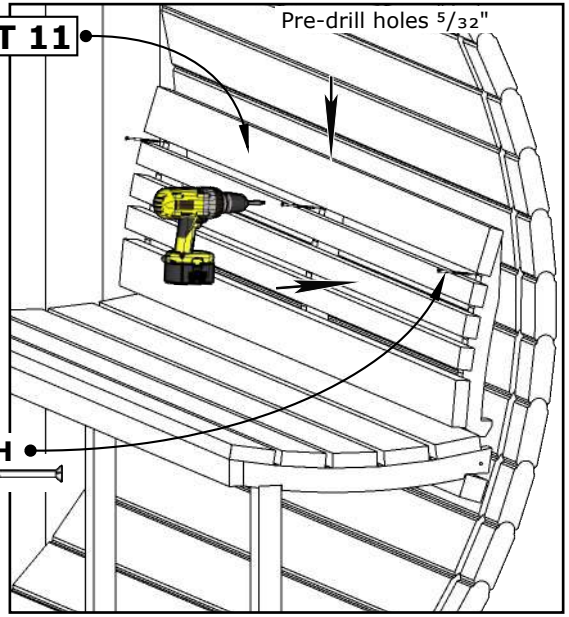

IV

EE8G Barrel Sauna 79D" x 90H"

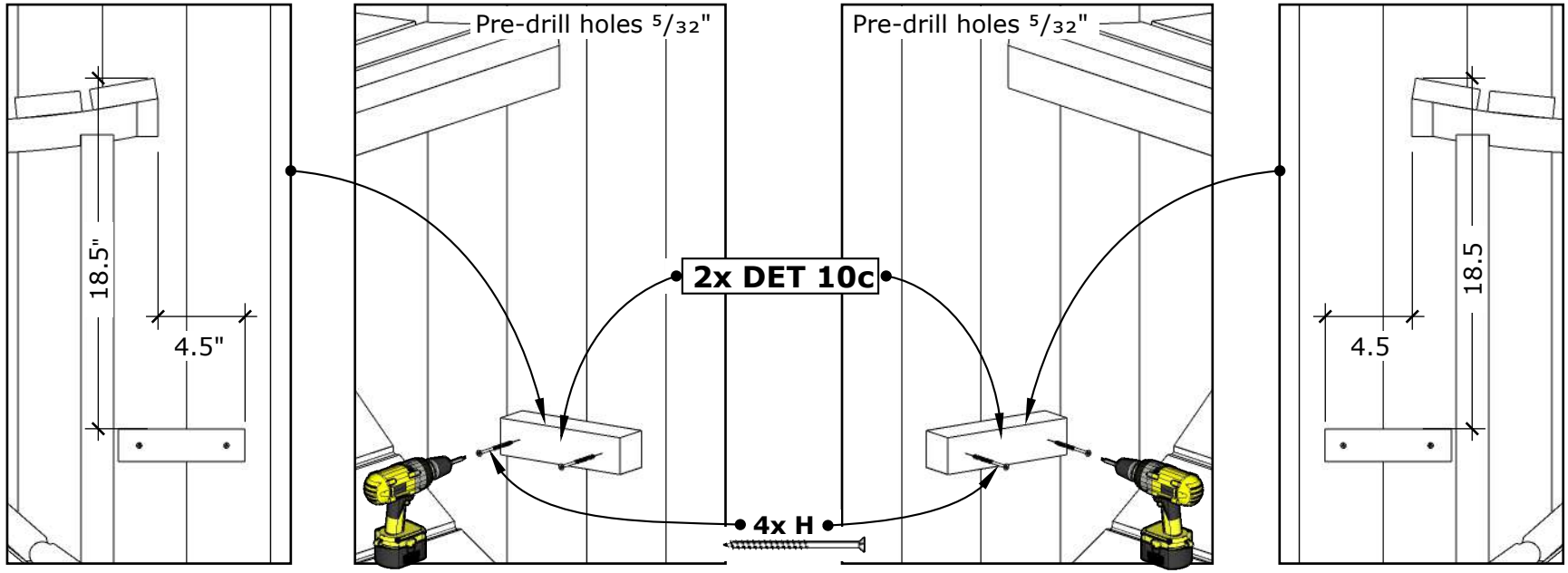

I

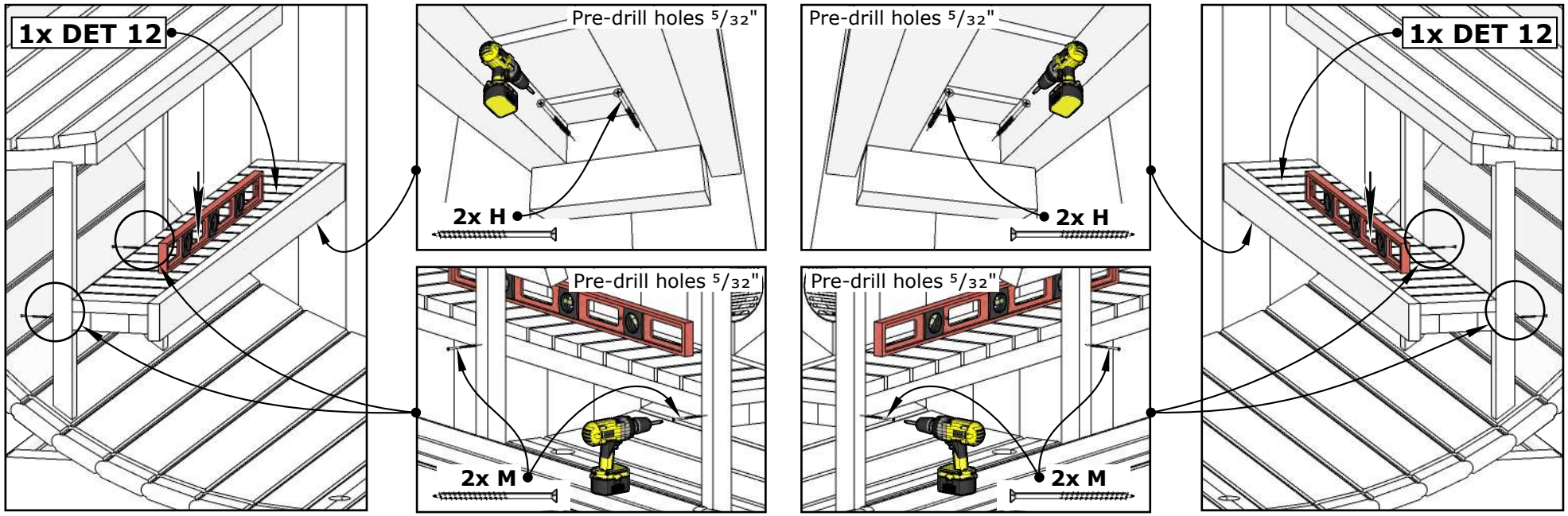

II III

EE8G Barrel Sauna 79D" x 90H"

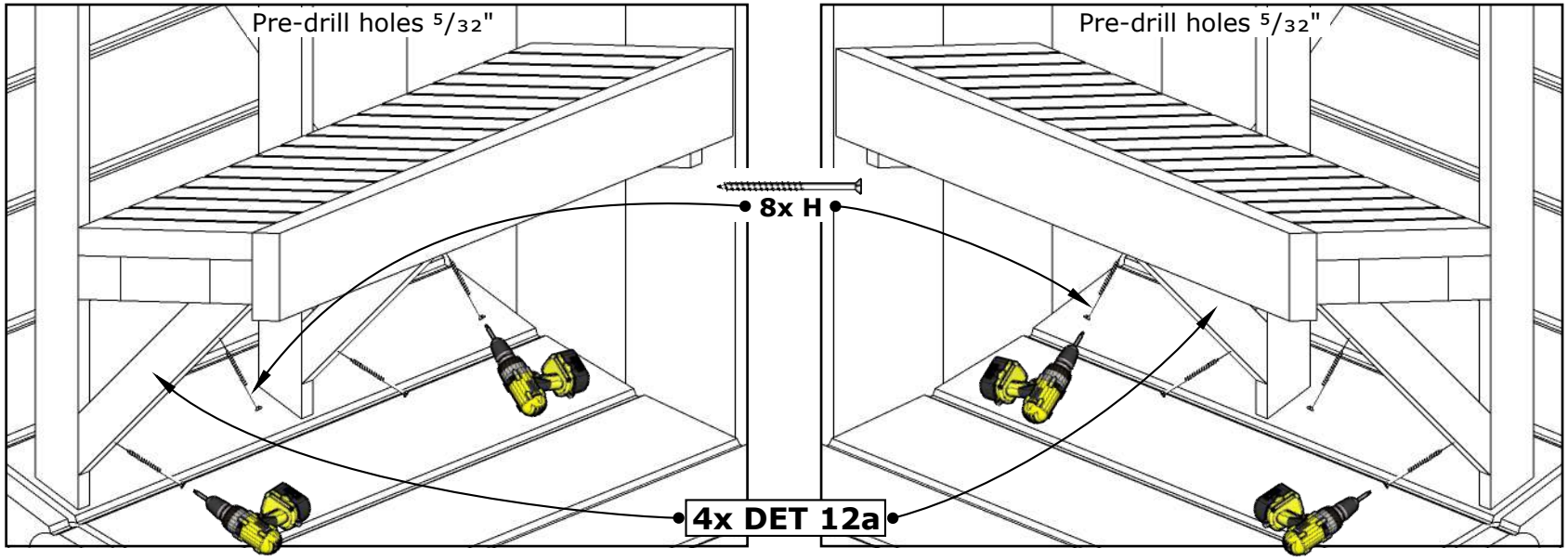

I

Use waterlevel.

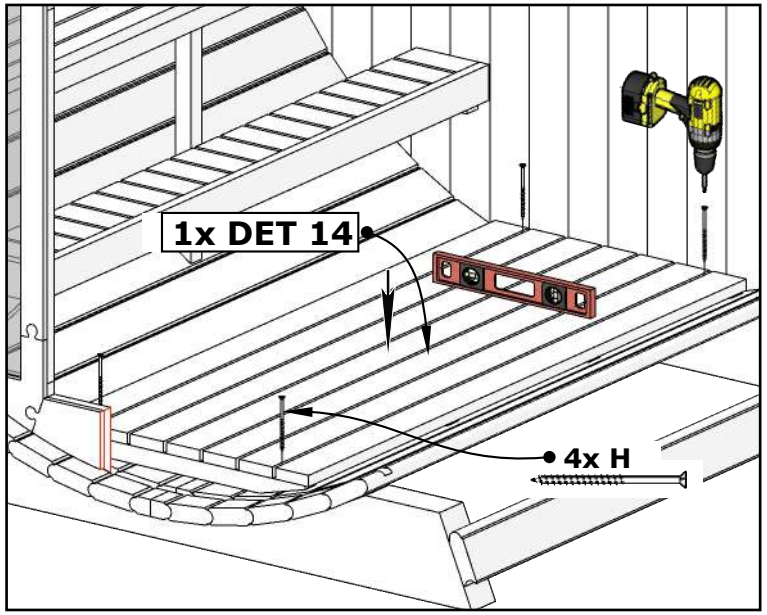

II

EE8G Barrel Sauna 79D" x 90H"

ATTENTION!
HEATER GUARD MAY NOT MEET THE SAFETY DISTANCES OF ALL HEATERS AND SHOULD NOT BE USED IF THE HEATER DOES NOT FIT!

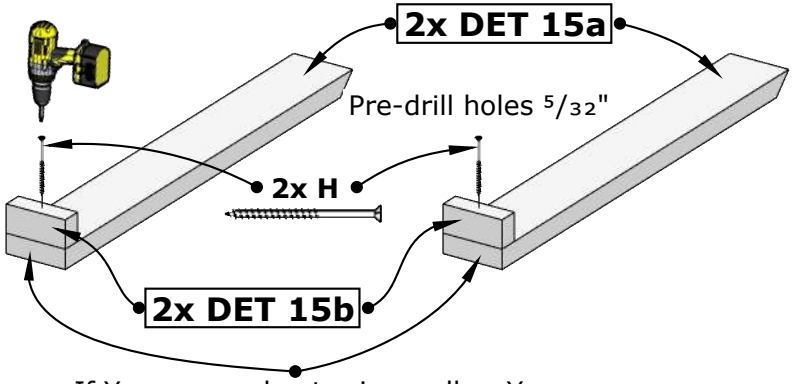

If Your sauna heater is smaller, You can cut DET 15a to lenght from the non-tapered end to better fit your heater.

I

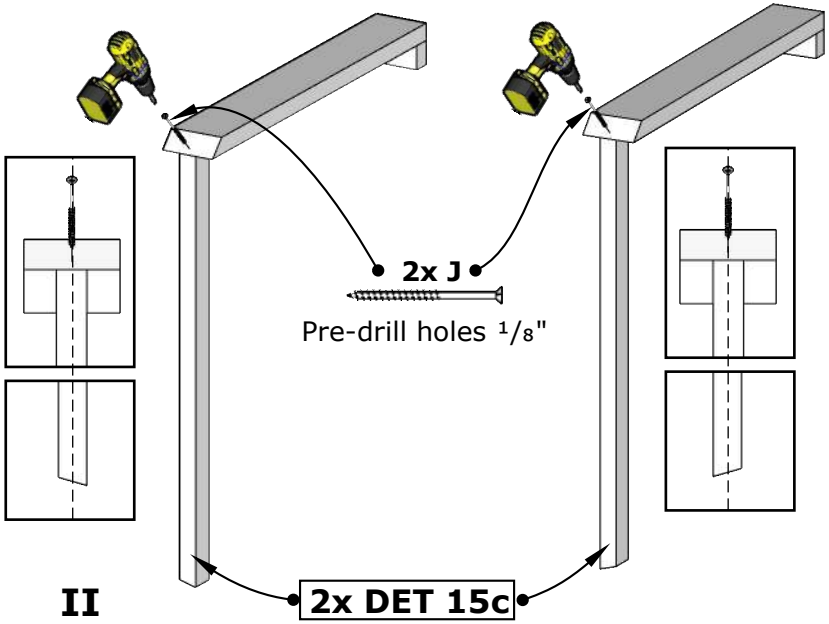

II

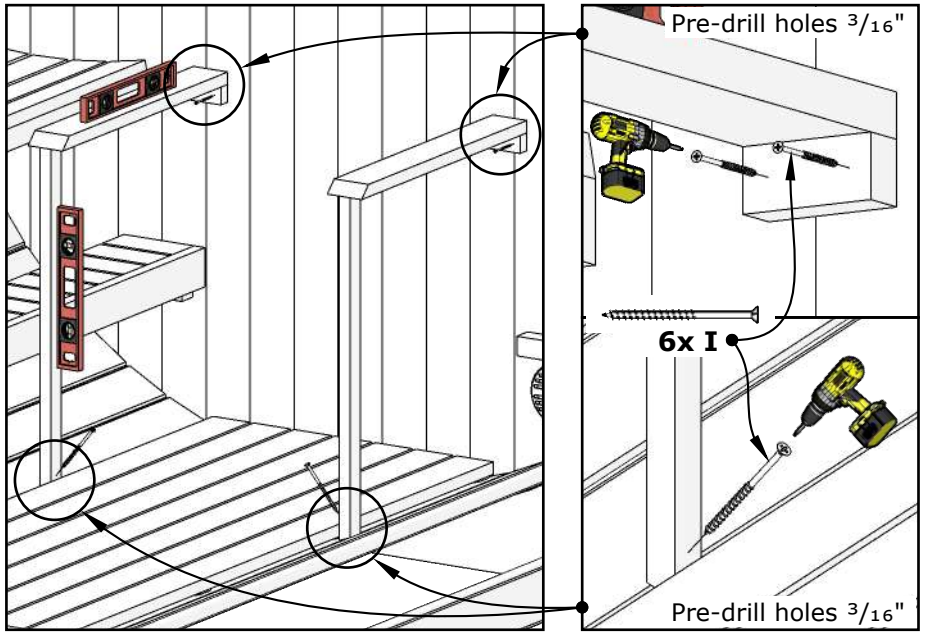

III

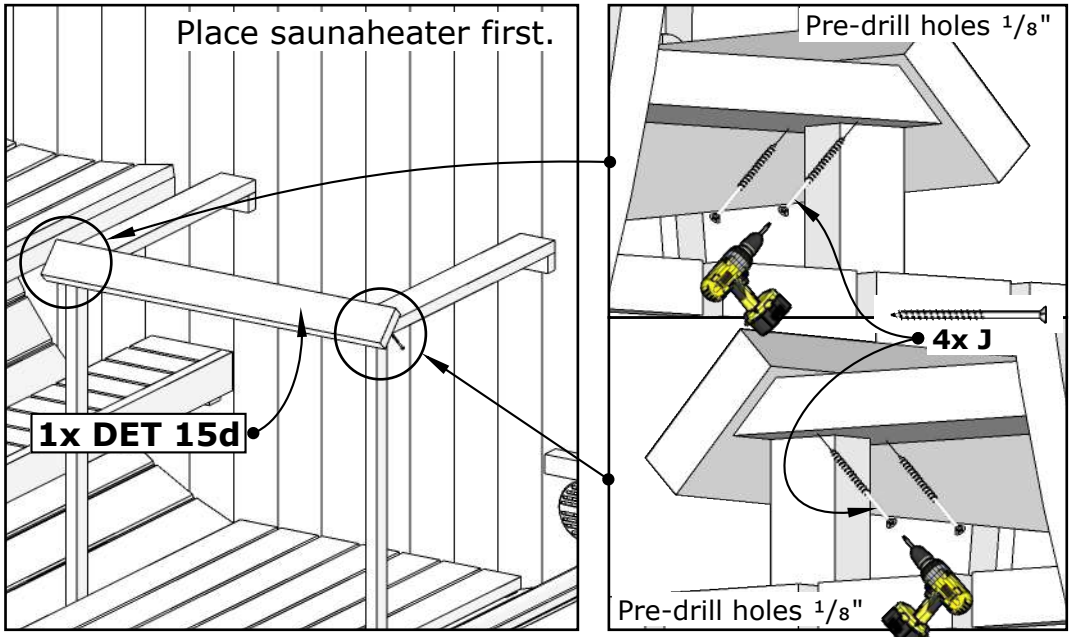

IV

EE8G Barrel Sauna 79D" x 90H"

1x DET 21

Attention!
The door must open outwards. If you need the door handle to be on the opposite side, rotate door 180 degrees.

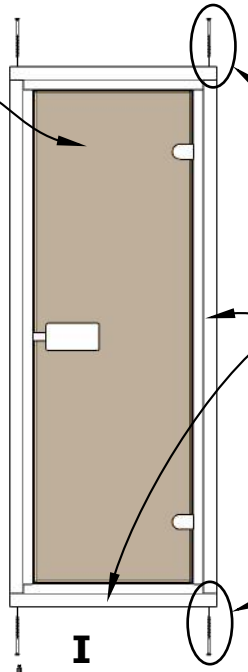

2x M

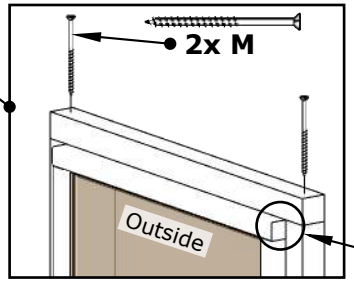

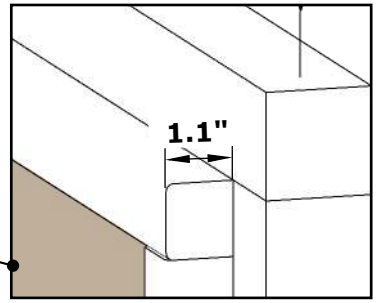

2x DET 21c
2x DET 21d

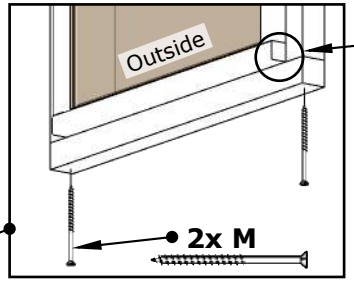

2x M

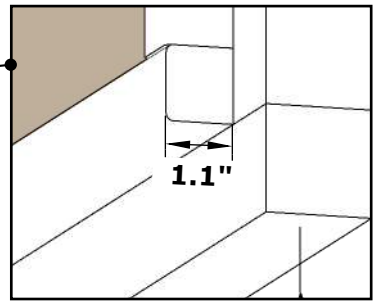

I

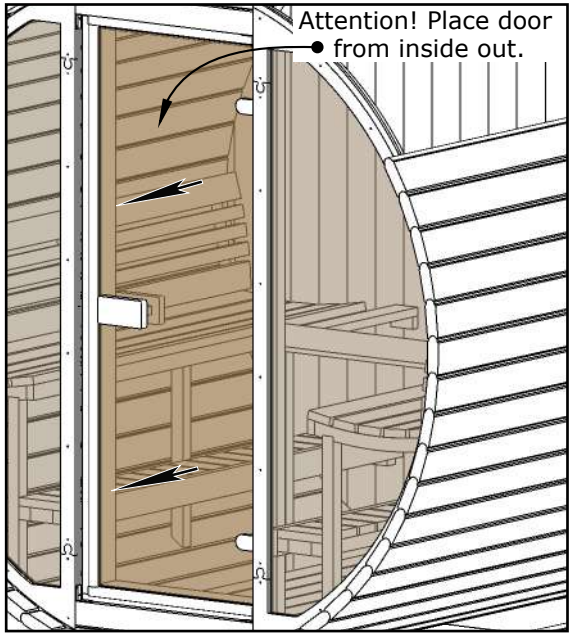

II

Ensure door frame is pressed tightly against the wall and fasten from inside.

Use waterlevel.

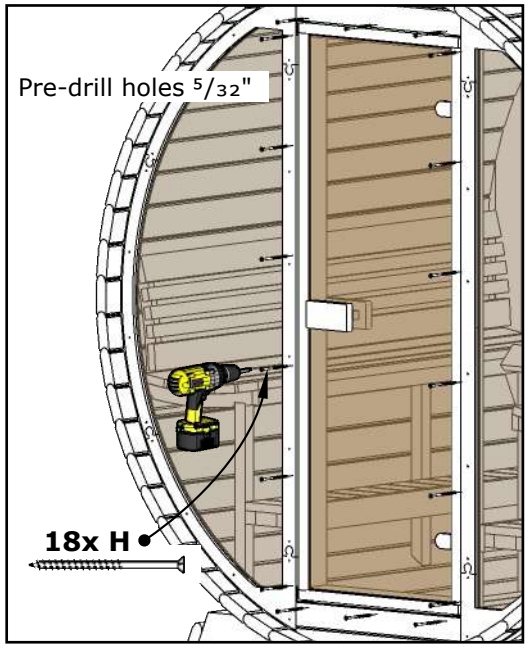

III

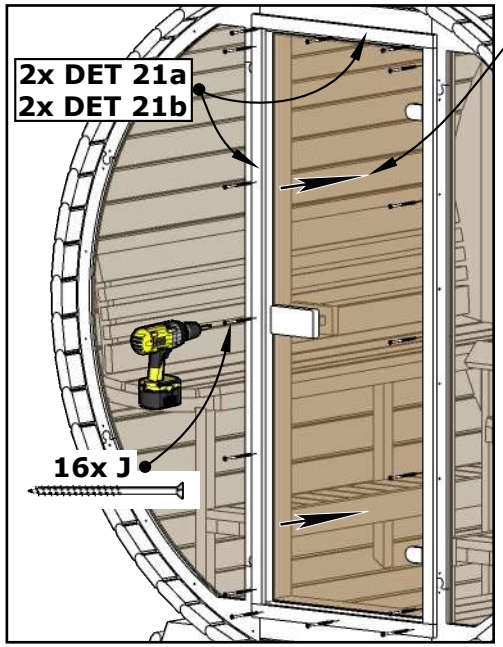

IV

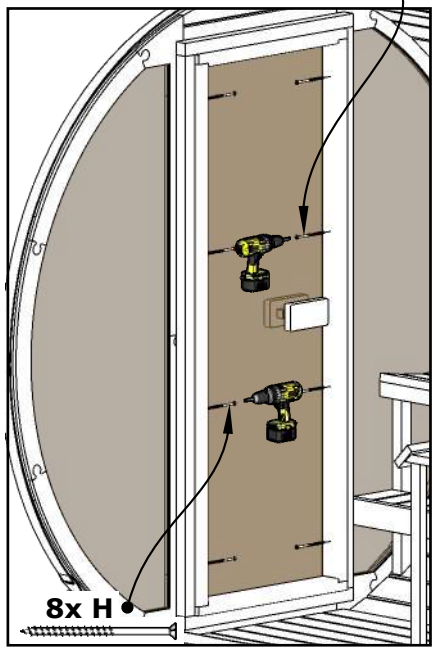

V

EE8G Barrel Sauna 79D" x 90H"

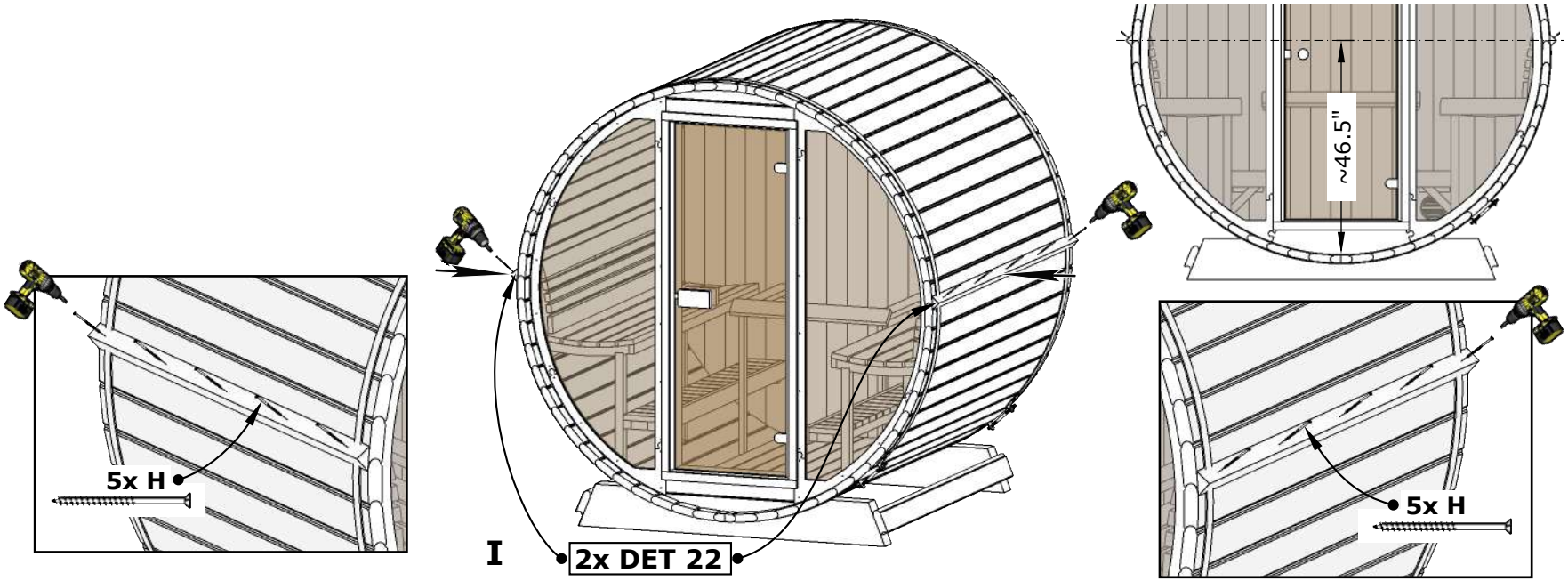

Attention! Refer to shingle installation manual provided in package.

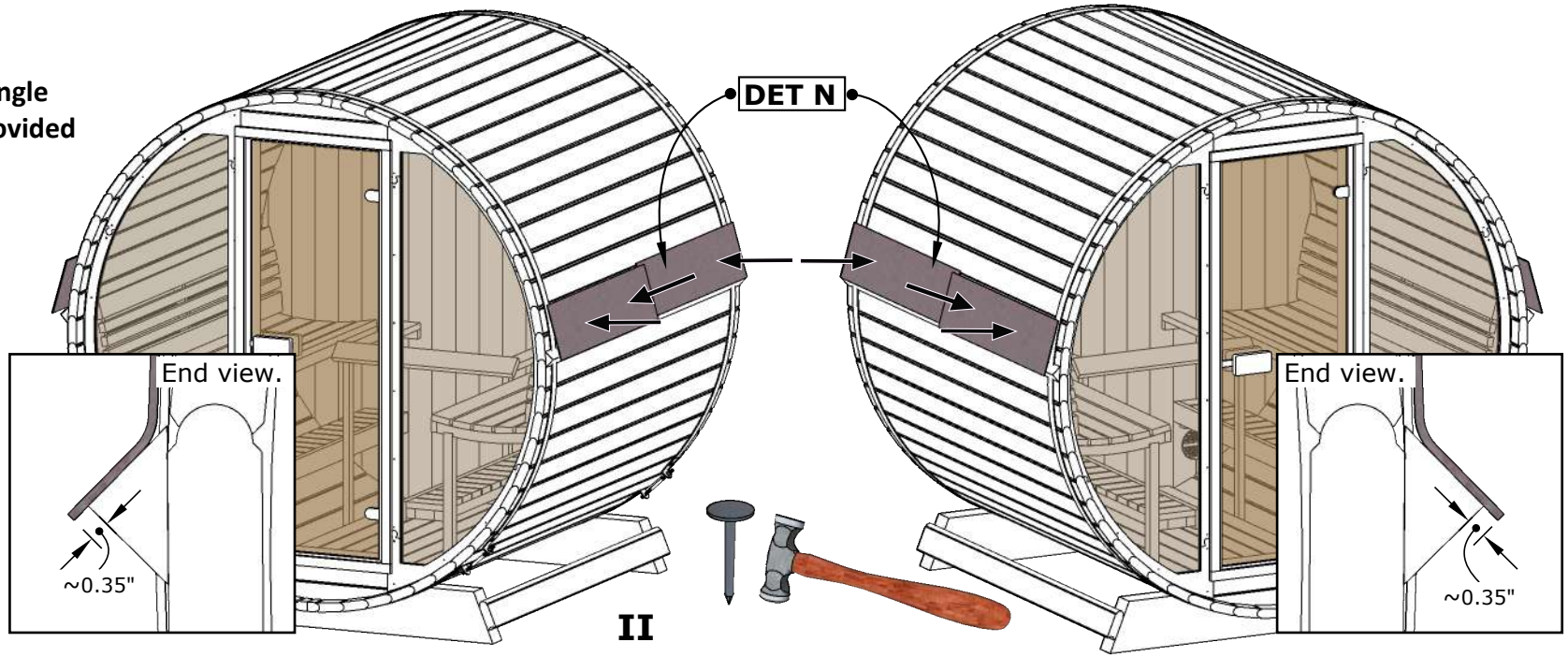

EE8G Barrel Sauna 79D" x 90H"

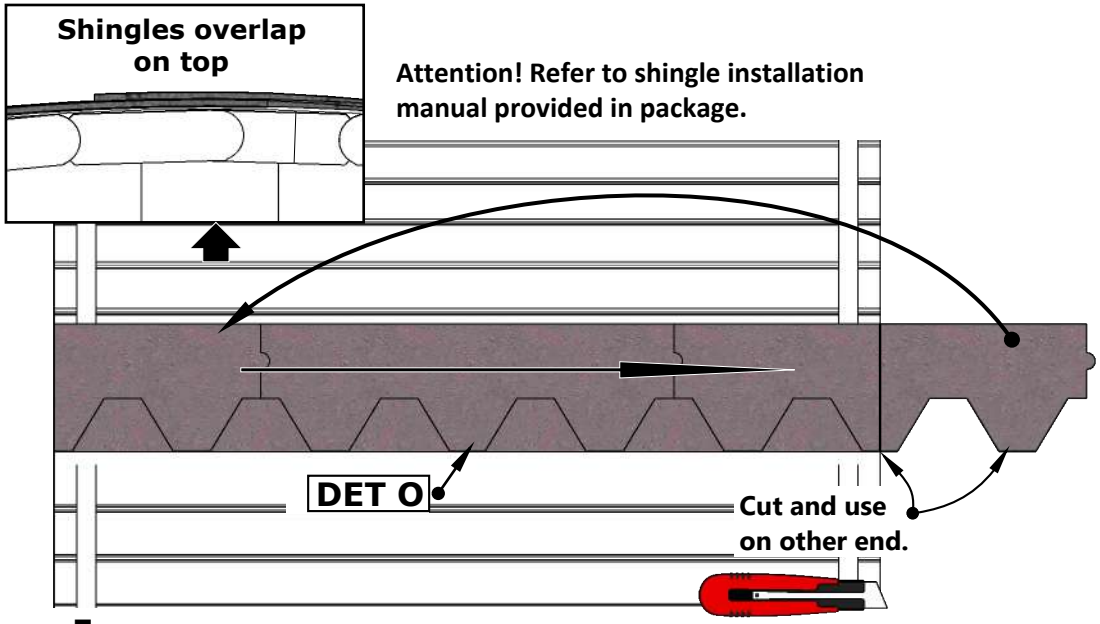

I

Attention! Refer to shingle installation manual provided in package.

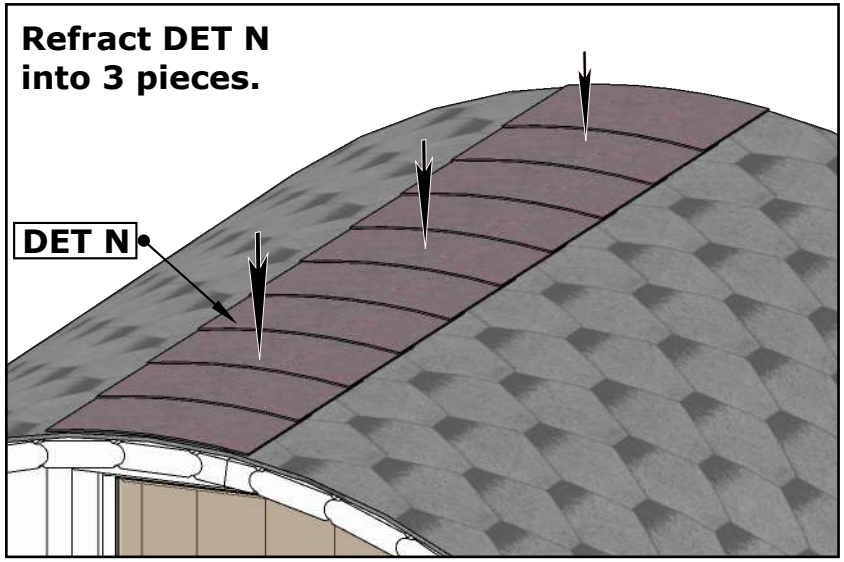

II

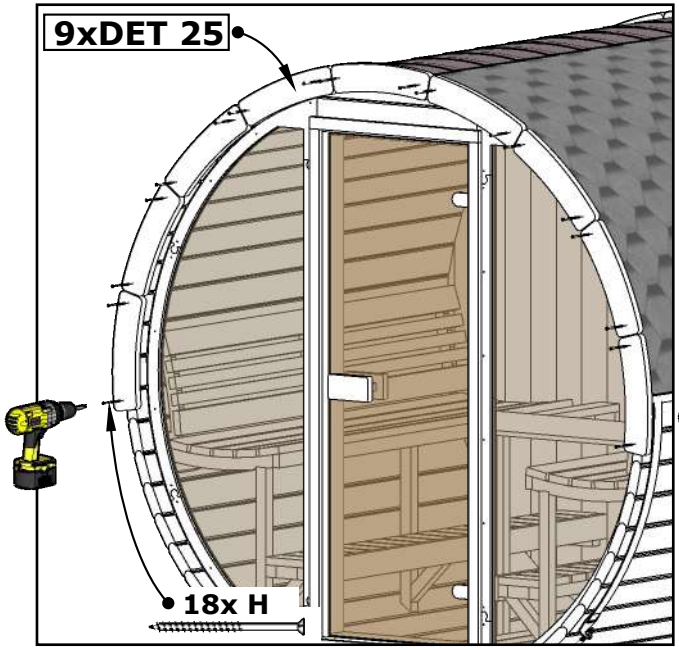

III

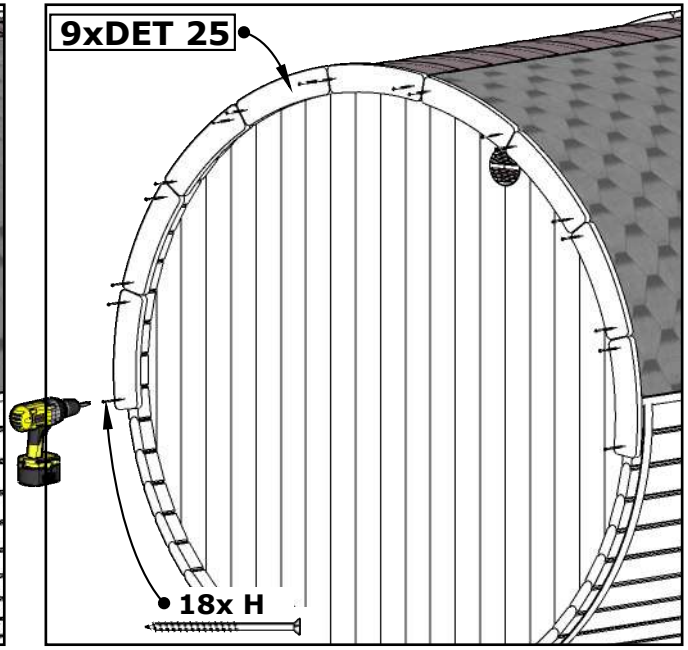

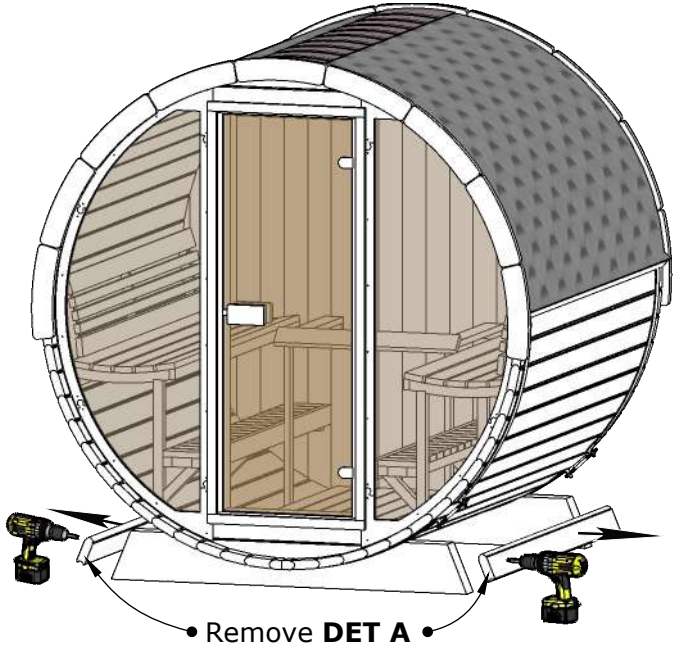

Installation Instructions

When building a wooden product, it is important to follow all installation instructions to ensure the quality and durability is guaranteed.

Important!

Identification number of the Product / **Serial Number:** **123456789**

Must be accompanied by the serial number to identify the product.

General Installation

- **Careful handling:** Treat all wooden parts with care during assembly to avoid scratches or friction.
- **Level foundation:** Ensure the sauna sits on a stable, level foundation for proper door and window operation. Ensure the base has enough stability to support the sauna.
- **Proper drainage:** Avoid constant water exposure to wooden materials.
- **Electrical and plumbing:** Hire qualified professionals for electrical work, including heater and lighting installation.
- **Wood treatment:** To ensure optimal performance and longevity of your Sauna, proper wood treatment is crucial. We strongly recommend treating all wooden components with a wood preservative. This includes unfinished skirting boards, if applicable, which should be treated immediately upon assembly.

Wood Characteristics in Saunas

- **Natural changes:** Wood is a natural material that may crack or warp slightly due to temperature fluctuations. This is normal in saunas with extreme temperature and humidity changes.
- **Deformation factors:** The risk of wood deformation depends on the material, usage intensity, and is more noticeable with wider boards.
- **Darkening wood:** Wood in areas exposed to hot steam may darken over time.
- **Wood Smell:** Thermally treated wood has a characteristic smell that diminishes over time but does not completely disappear. In a sauna, the smell weakens faster if it is heated for a long time and aired at the same time. The smell is softened by treating the wood with a suitable wood oil or wood care product. Do not wash untreated thermal wood with water, as this will make the smell stronger.

Door and Window Maintenance

- **Regular checks:** Regularly inspect window and door hinges and locks. Tighten loose components and lubricate as needed.

- **DOOR ADJUSTMENT INSTRUCTIONS**

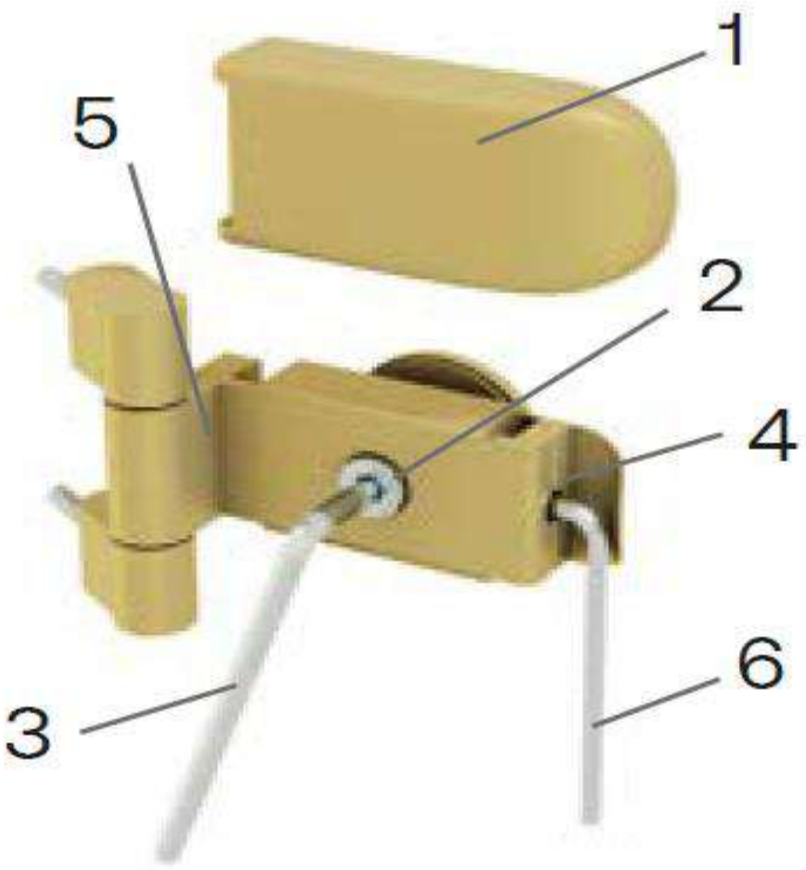

- You will need 3-mm (6) and 5-mm (3) hexagon keys for adjusting the hinges. Remove the plastic covers from the hinges (1). Loosen the fixing screws (2) one turn (do not remove the glass). If needed, the door can be shimmed up a bit from here vertically. If it needs to be adjusted left or right, turn the screws (4 & 5) as required. If one screw is turned counterclockwise, the other must be turned clockwise. Make sure both screws are tight when you have completed this step. Then tighten the fixing screws (2) when adjusted.

Sauna Care Guide

Surface Preparations:

- The soil underneath the sauna should be removed and replaced with a well-drained and load bearing material.
- It is important to ensure that the surface is load bearing. In addition, it is important to limit the growth of flora underneath and around the sauna to minimize any defects from moisture.
- Bring the power cable to the sauna in accordance with the heater manufacturers' manual.

During sauna use:

- When using the heater and the control unit refer to the user manual provided by the heaters' manufacturer.
- Throw water only on the stones and not on the walls or the platform.
- To keep the platform looking fresh, we advise using seating pads or a towel on the bench.
- Avoid sitting on the platform in wet swimwear.
- Keep an eye on the stones as they might break down in time. Replace old stones with new ones or add new stones.
- Avoid use of non-compliant cleaning agents. For example, disinfectants bleach the wood surface and may ruin it.

After sauna use:

- After using the sauna, ventilate the room and allow the surfaces to dry.
- Wipe off the platform with a clean, damp cloth. Keep excess water from pooling on wood surfaces. Do not use a stream of water to wash the platforms.
- After cleaning the sauna, ventilate the room and allow surfaces to dry. Remove seating pads from the benches.
- When not using the sauna, the door should remain closed.

Annual Maintenance:

- The wood in the sauna should be treated with a specific cleaning compound (sauna cleaner).
- Wash all parts of the platform on all sides with a special cleaning compound (sauna cleaner), using a soft brush and/or cloth. Follow the directions of the cleaning compound manufacturer.
- For stronger stains and soiling, the platform surface can be cleaned gently using fine-grade sandpaper. The platform or sanded surface should then be re-treated with protectant.

Avoid the following:

- Drying textiles such as carpets and clothing etc. as this may pose a safety hazard. Excessive moisture may also damage the surface of the wood.
- Do not heat the sauna to a temperature beyond the specifications of the heater manufacturer. Excessive heat may cause the wood to warp or pose a safety hazard.
- Pressure washing or using a stream of water to clean the sauna, as excess moisture may permanently damage the wood surface and structures.

SAUNA LIFE SAUNA LIMITED LIFETIME WARRANTY
Sauna Life extends this Limited Warranty solely to the original retail consumer purchaser of any Sauna Life sauna purchased from one of its authorized resellers.

LIMITED LIFETIME SAUNA WARRANTY
Sauna Life warrants that the Sauna Life sauna shall be free from defects in workmanship under normal conditions of use and service for the lifetime of the sauna for residential applications after delivery to the original retail purchaser. This warranty is limited to making good any factory assembled component which in the judgment of Sauna Life is deemed defective in workmanship. The warranty does not cover normal material wear, natural weathering of the lumber, or installation or delivery of components and applies only to the original retail purchaser.

WARRANTY PERFORMANCE
For any warranty service, Sauna Life reserves the right to choose, at its option, repair of the problem or a replacement of the defective part. Sauna Life reserves the right to substitute a part or component of equivalent value, either new or factory reconditioned, and any such repair or replacement shall assume as its warranty only the remaining portion of the warranty on the original product. In the event Sauna Life chooses to repair any malfunction or defect covered by this warranty, a return authorization will be issued, and the component will be returned prepaid freight to Sauna Life for repair of the defect. Sauna Life will then ship the component back the original retail purchaser upon completion of the repair. Prior to any return, contact Sauna Life at: Sauna Life, 511 Glenn Avenue, Wheeling, Illinois 60090, telephone number: (800) 957-2862, for packaging and shipping instructions and a return authorization number. In addition, Sauna Life will require photographs of any defect and reserves the right to inspect or designate an agent to inspect any part that is claimed to be defective and covered by this warranty. Labor charges and related expenses for removal, installation, or replacement of the sauna or its components are not covered under this warranty. Normal wear and tear, cosmetic issues or changes to individual pieces of lumber due to natural aging and weathering are not covered. Sauna heaters and added components are not covered by this warranty.

ACTS INVALIDATING WARRANTY
This warranty is void if the Sauna Life sauna has been subject to alteration, misuse or abuse, commercial use, or if any repairs on the sauna are attempted by anyone other than an authorized representative of Sauna Life. Alteration shall include, but is not limited to, deviation from the original assembly instructions, component change, or the addition of any non-approved device or heating system, which contributes to a component or unit failure, or unsafe operating system. Use of the sauna in an application for which it is not designed will void this warranty. This includes, but is not limited to, damage caused by operation above safe sauna operating temperatures, damage caused by added components, damage to the sauna's surface caused by harsh chemicals, damage caused by movement of the product, and damage caused by acts of God.

DISCLAIMERS
Except as expressly provided above, Sauna Life makes no other representation or warranty, express or implied, either in fact or operation of law, statute, or otherwise, and Sauna Life specifically disclaims any and all implied or statutory warranties, including warranties or merchantability and of fitness for a particular purpose. Sauna Life shall not be liable for loss of use of the Sauna Life sauna or other incidental or consequential costs, expenses, or damage, which may include but are not limited to, the removal of or reinstallation of a wall, deck or other fixture, water leakage, costs of shipping or packaging, applicable taxes, or the payment of any costs or expenses of disassembly, removal, or reinstallation of the product or any part. Your rights may vary from state to state. Under no circumstances shall Sauna Life or its representatives be held liable for injury to any person or damage to any property, however arising, even if caused by the Sauna Life Sauna or its representatives' negligence. No distributor, salesperson, dealer, retailer, or other representative of Sauna Life has the authority to alter or change these warranties either orally or in writing.